**Tender specification:**

Oventrop thermostatic valve “Aquastrom VT” with presettable control temperature for the thermal control and presettable residual volume flow for the hydronic balancing of circulation pipes.

Thermal control:
Recommended control range: 55 °C up to 60 °C
(max. control range: 50 °C up to 65 °C, control accuracy ± 1 °C)
Having reached a preset temperature (e.g. factory setting of 57 °C), the valve limits the volume flow to a residual volume which is set at the valve.
The valve also supports thermal disinfection. At approximately 6 °C above the set temperature, the volume flow rises to promote higher flow rates. At approximately 16 °C above the set temperature, the flow rate decreases and is again limited to the set residual volume flow. This reduction to the residual volume flow ensures that, due to the restored hydronic balance, the succeeding plant components are also supplied with a disinfection volume flow. The valve thus guarantees an optimum thermal disinfection of the circulation system. Once the disinfection process has been completed, the valve returns to its starting position.

Hydronic balancing:
For a hydronic balancing of the risers in a potable water circulation system, the residual volume flow which shall be reached at a set temperature may also be set at the valve. This setting is separate to the temperature setting and 6 different residual settings are available. The valve is preset at works to a residual volume flow for DN 15 of $k_V$ = 0.1 (= presetting 6) or DN 20 of $k_V$ = 0.3 (= presetting 6).
The valve is additionally equipped with an isolating ball valve, a draining valve for hose connection and insulation shells.
In combination with an isolating valve in the supply pipe, this allows to isolate and drain the riser for maintenance and repair.
With the help of the thermometer, the water temperature in the circulation riser can be monitored at any time and enables the user to trace system malfunctions quickly and easily.
Temperature controller not in contact with the fluid; all components in contact with the fluid free from brass; body made of bronze, O-rings made of EPDM, plastic parts made of PPO (polyphenylene oxide), without dead zone.

**Technical data:**

| | | |
|---|---|---|
| Max. operating temperature: | | 90 °C |
| Max. test pressure: | | 16 bar |
| Operating pressure: | | 10 bar |
| Factory settings: | | |
| Temperature: | | 57 °C |
| Residual volume flow: | DN 15: | $k_V$ = 0.1 (= presetting 6) |
| | DN 20: | $k_V$ = 0.3 (= presetting 6) |
| Max. differential pressure: | | 1 bar |
| Installation position: | | any, but easily accessible |
| Insulation: | | Building material class B 1 according to DIN 4102 |

DVGW, SVGW, KIWA, WRAS, VA and WaterMark certified.

**Installation advice:**
The valve is to be installed in the correct direction of flow (see arrow on the body).



“Aquastrom VT”

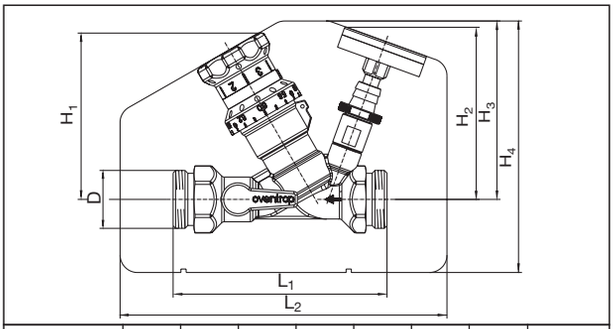


| Item no.: | DN | $L_1$ | $L_2$ | $H_1$ | $H_2$ | $H_3$ | $H_4$ | D |
|---|---|---|---|---|---|---|---|---|
| 4206704 | 15 | 110 | 188 | 95 | 98 | 103 | 145 | G ¾ |
| 4206706 | 20 | 123 | 188 | 95 | 98 | 103 | 145 | G 1 |

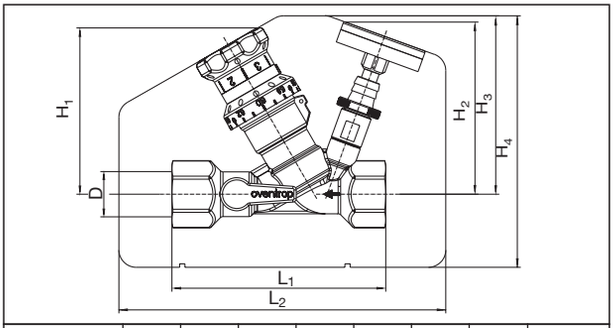


| Item no.: | DN | $L_1$ | $L_2$ | $H_1$ | $H_2$ | $H_3$ | $H_4$ | D |
|---|---|---|---|---|---|---|---|---|
| 4205704 | 15 | 110 | 188 | 95 | 98 | 103 | 145 | G ½ |
| 4205706 | 20 | 123 | 188 | 95 | 98 | 103 | 145 | G ¾ |

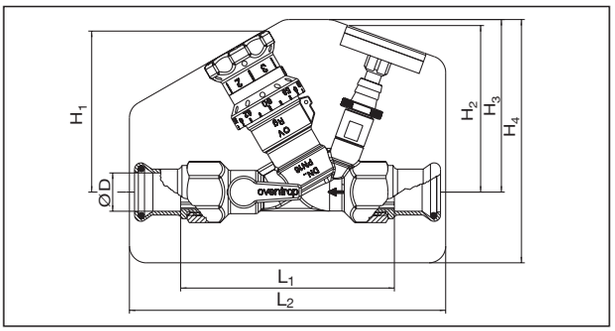


Bronze press connection SANHA

| Item no.: | DN | ØD | $L_1$ | $L_2$ | $H_1$ | $H_2$ | $H_3$ | $H_4$ |
|---|---|---|---|---|---|---|---|---|
| 4205752 | 15 | 15 | 115 | 188 | 95 | 98 | 103 | 145 |
| 4205753 | 15 | 18 | 115 | 188 | 95 | 98 | 103 | 145 |
| 4205754 | 20 | 22 | 130 | 188 | 95 | 98 | 103 | 145 |

Dimensions

**Advantages:**

- automatic thermal control of the volume flow
- support of thermal disinfection
- volume flow increases at about 6 °C above the set temperature, therefore disinfection temperature in the riser is reached quickly
- without dead zone
- at approx. 16 °C above the set temperature, the volume flow returns to the set residual volume flow which guarantees the hydronic balance of the system during the disinfection process
- residual volume flow with 6 different presetting positions
- self-cleaning valve assembly
- corrosion resistant due to bronze material
- lead lockable to prevent tampering
- temperature monitoring with the help of a thermometer or a sensor element (accessory) via a centralised building control system
- ball valve isolation facility for maintenance work
- integrated draining valve for hose connection

**Setting of the nominal temperature value:**

Turn the handwheel of the temperature control unit until the required temperature value on the scale is in line with the lead locking device on the valve body. **Do not lift the handwheel during temperature setting!**

Recommended temperature range: 55 °C up to 60 °C
Factory setting: 57 °C

**Setting of the residual volume flow:**

The residual volume flow can be modified by using the handwheel for temperature setting. To do so, keep hold of the temperature ring and **pull the handwheel upwards until stop (approx. 5 mm)**. Now turn the lifted handwheel clockwise to the required presetting value.
**The chosen presetting value must be in line with the raised black triangular arrow on the temperature ring!**
After releasing the handwheel, please ensure that it engages flush with the cogs of the temperature ring.

Residual volume flow:

| Size | Presetting | $k_V$ value | $k_V$ at 2 K P-deviation |
|---|---|---|---|
| DN 15: | 1: | $k_V$ = 0.035 | $k_V$ = 0.035 |
| | 2: | $k_V$ = 0.045 | $k_V$ = 0.071 |
| | 3: | $k_V$ = 0.058 | $k_V$ = 0.104 |
| | 4: | $k_V$ = 0.069 | $k_V$ = 0.136 |
| | 5: | $k_V$ = 0.081 | $k_V$ = 0.165 |
| | 6: | $k_V$ = 0.098 | $k_V$ = 0.193 |
| DN 20: | 1: | $k_V$ = 0.10 | $k_V$ = 0.100 |
| | 2: | $k_V$ = 0.14 | $k_V$ = 0.151 |
| | 3: | $k_V$ = 0.18 | $k_V$ = 0.201 |
| | 4: | $k_V$ = 0.22 | $k_V$ = 0.250 |
| | 5: | $k_V$ = 0.26 | $k_V$ = 0.299 |
| | 6: | $k_V$ = 0.30 | $k_V$ = 0.347 |

Factory setting: DN 15: $k_V$ = 0.1 (presetting = 6)
DN 20: $k_V$ = 0.3 (presetting = 6)

Residual volume flow increase: $k_V$ = presetting + 0.025 ($k_V$)

Flow rate at 40 °C: DN 15: $k_V$ = 0.47
DN 20: $k_V$ = 0.55

To protect the set parameters against unauthorized tampering, the handwheel is lead lockable.

**Information regarding installation of accessories:**

The thermostatic valve “Aquastrom VT” can be integrated into an existing centralised building control system with the help of a sensor element PT 1000 which may be installed subsequently. To do so, the thermometer is removed and is replaced with the sensor element “Sensor LW TQ” PT 1000 (accessory item no. 4205592).



Temperature setting



Volume flow setting

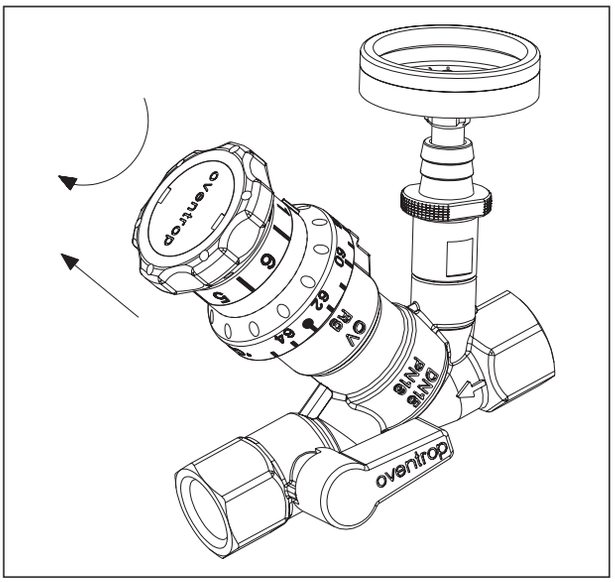

**Description of thermal regulation behaviour:**

The thermal regulation behaviour of the circulation valve is described in chart 1.

During normal operation (temperature range up to 65 °C), the circulation valve limits the volume flow derived from the nominal temperature to the set residual volume flow.

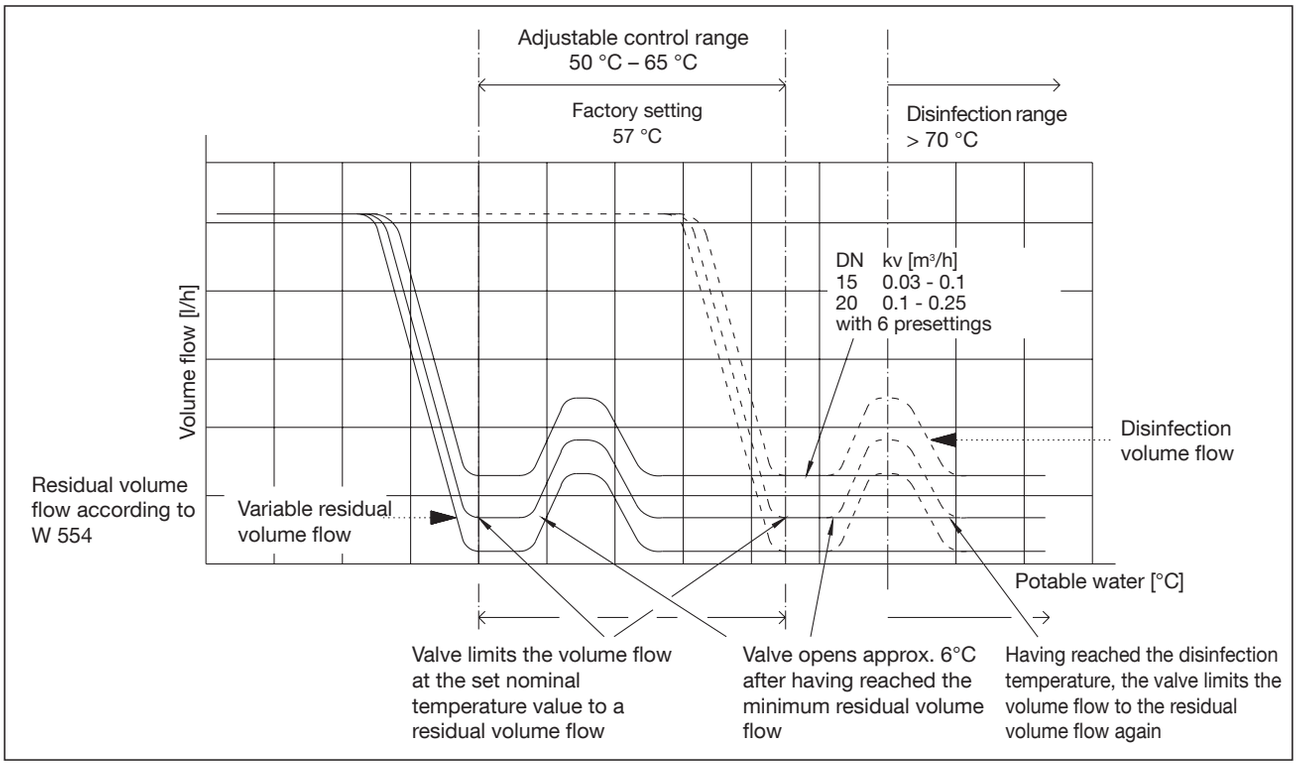


Chart 1

**Description:**

With the temperature rising during the disinfection process, the Oventrop valve “Aquastrom VT” allows for a higher volume flow when the set control temperature is exceeded by approx. 6 °C. Due to the higher flow rate, the heat supply in the corresponding circulation riser is accelerated. When reaching a temperature approx. 16 °C above the set control temperature, the volume flow is decreased to the chosen residual volume flow. As a result, a higher differential pressure is reached in the corresponding riser and thermal disinfection in the succeeding risers is accelerated. This way, the disinfection temperature within the circulation is reached faster than within a circuit which is not hydraulically supported during the disinfection process. As a result, significant energy savings can be made. Once the disinfection process has been completed, the water temperature drops, the “Aquastrom VT” returns to normal operation and the temperature returns to the set nominal value.

**Accessories**

Insulation for DN 15 and DN 20
Item no. 4205781

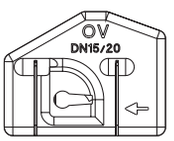


Thermometer
Item no. 4205591
(the draining valve for hose connection is required for the installation of a thermometer)




“Sensor LW TQ”
Sensor element PT 1000
Item no. 4205592



Draining valve for hose connection
Item no. 4205593



Lead sealing set
Item no. 1089091, 10 pces.



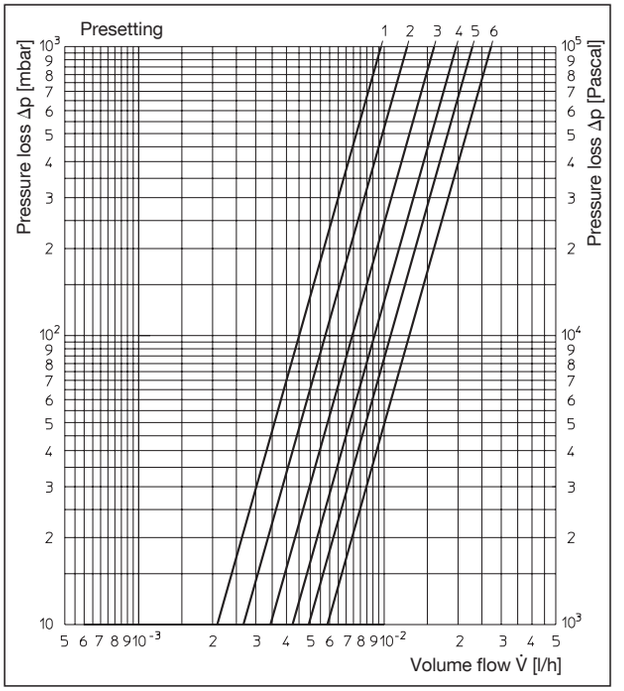


“Aquastrom VT” DN 15 Residual flow rate

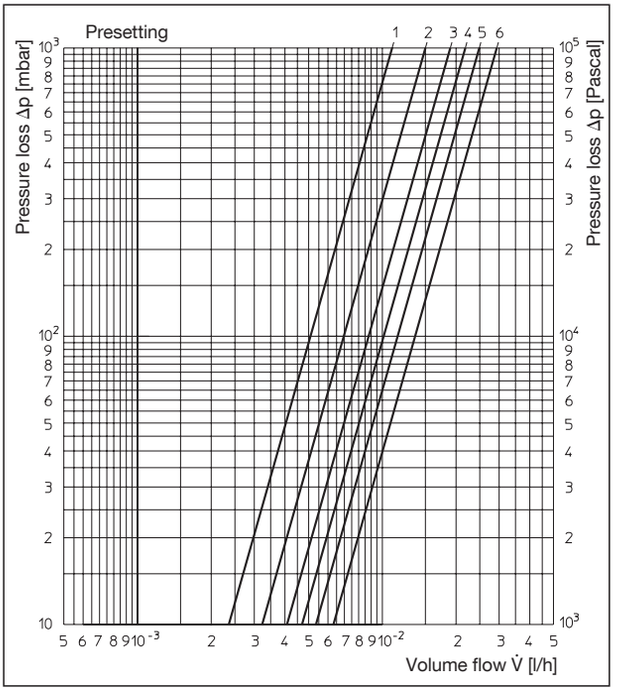


“Aquastrom VT” DN 15 Disinfection flow rate

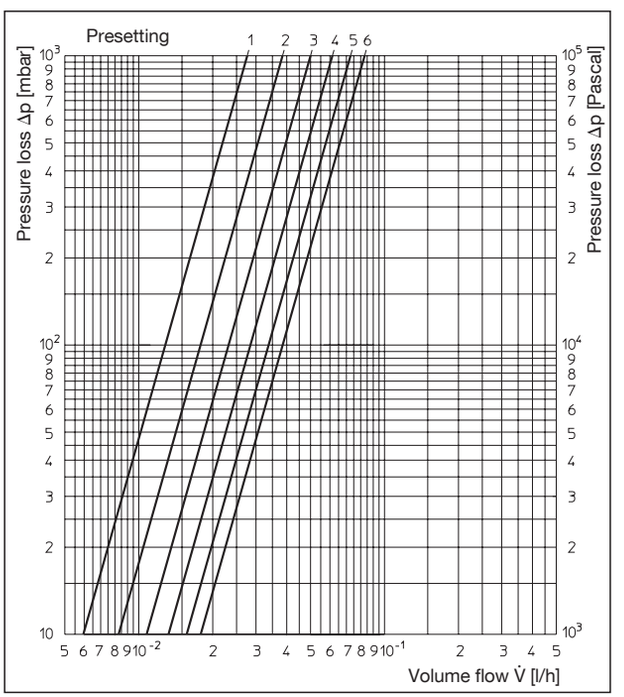


“Aquastrom VT” DN 20 Residual flow rate

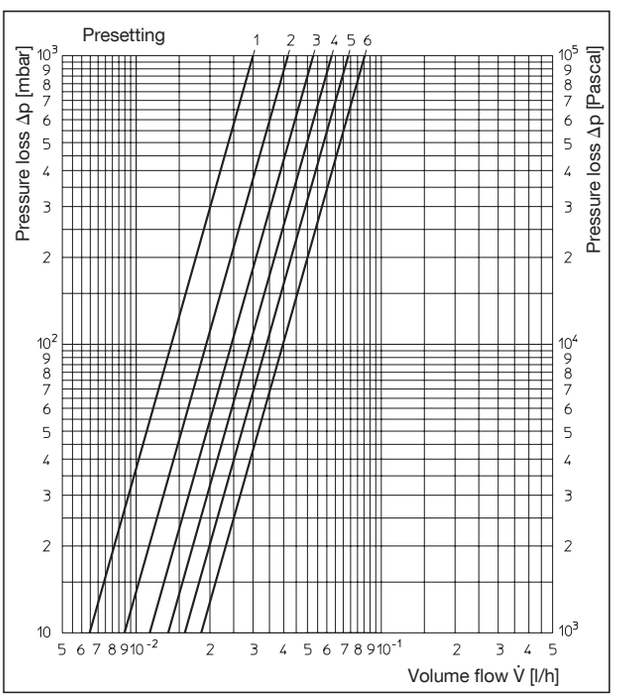


“Aquastrom VT” DN 20 Disinfection flow rate

OVENTROP GmbH & Co. KG
Paul-Oventrop-Straße 1
D-59939 Olsberg
Germany
Phone +49 2962 82 0
Fax +49 2962 82 450
E-Mail mail@oventrop.de
Internet www.oventrop.de

For an overview of our global presence visit www.oventrop.de.

Subject to technical modification without notice.

Product group 12
ti 214-EN/10/MW
Edition 2016

Printed on paper free from chlorine bleaching.