SURBANA JURONG

building cities
shaping lives

Design for Safety Sharing Session

15 Aug 2017

HDB Hub



Introduction

“Safety is, and must be,

the basic principle in all design work.”

Assar Gabrielsson & Gustaf Larson

Founders of Volvo



Overview of WSH Act

Main legislation in Singapore on workplace safety and health (WSH), came in effect on 1 March 2006

Aimed at creating a world-class legal framework

Based on three guiding principles



Three Guiding Principles

Reduce risk at source

All stakeholders to eliminate or minimise the risks they create at the workplace.

Instil greater industry ownership of WSH standards

Employers to be responsible for developing suitable safe work procedures

Higher penalties for poor safety and health management

….well, we all know what this means….

Impact of Design on Safety

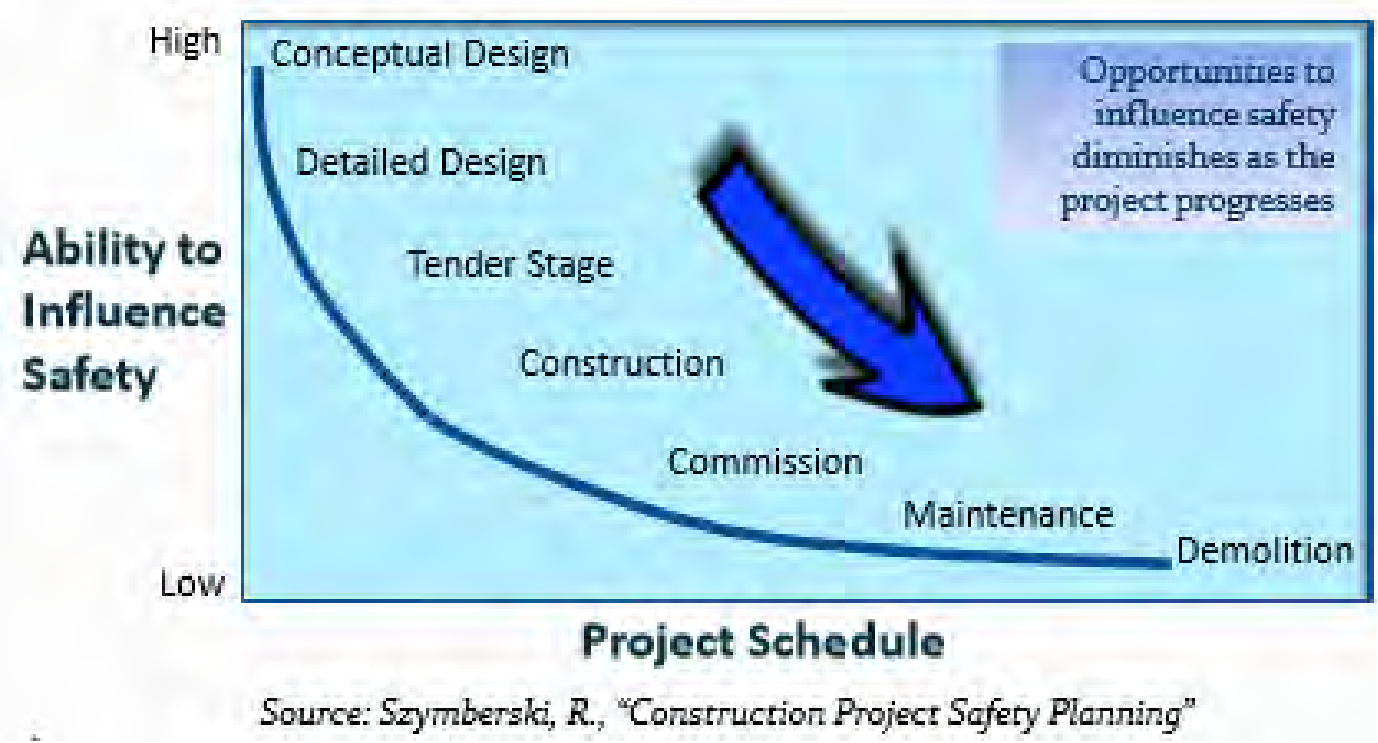

Source: Szymberski, R., "Construction Project Safety Planning"

WSH (Design for Safety) Regulations Commencement

Enacted	10 July 2015
Come into force	1 Aug 2016
Project Value	$10 Million and above



The 3 GUIDES

The 3 GUIDES

GUIDE 1 – Site Related Issues

Surrounding environment, public facilities, platform levels, site planning constraints and opportunities

GUIDE 2 – Schematic and Detail Design

Site Planning and building design.

GUIDE 3 – Site Related Works

Construction of Permanent and Temporary Works

Typical Seemingly Mundane Examples

Services within Site (Guide 1)

Design Consideration:
Services within site

Risk:
Death/Injury/ Service disruption.

Hazards Identified:
Electrocution/ Public affected

Can this hazards be designed out/mitigated?
No

Measures
To mark services and protect from damage

Follow Up
GUIDE 3

Action By
Contractor/DFSP

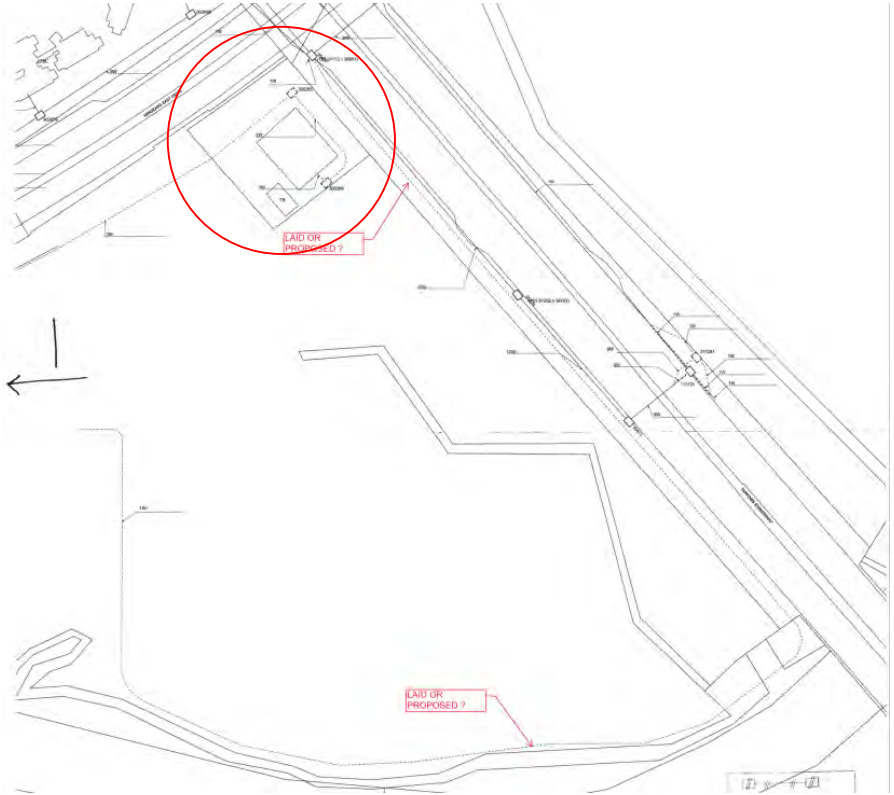

Access to Site (Guide 1)

Design Consideration:
Difference in levels between development and public road

Risk:
Death/Injury.

Hazards Identified:
Vehicle out of control can cause accident to pedestrians and accident to vehicles on road

Can this hazards be designed out/mitigated ?
Yes

Measures
To design cash barrier at site where level difference between site and road

Follow Up
GUIDE 2

Action By
Architect and Engineer



Precinct Pavilion (Guide 2)

Design Consideration:
Green Roof access for maintenance .

Risk:
Death/Injury.

Hazards Identified:
Fall from height during maintenance of green roof.

Can this hazards be designed out/mitigated ?
Yes

Measures
To design access to roof and provision for life line

Follow Up
GUIDE 2

Action By
Architect

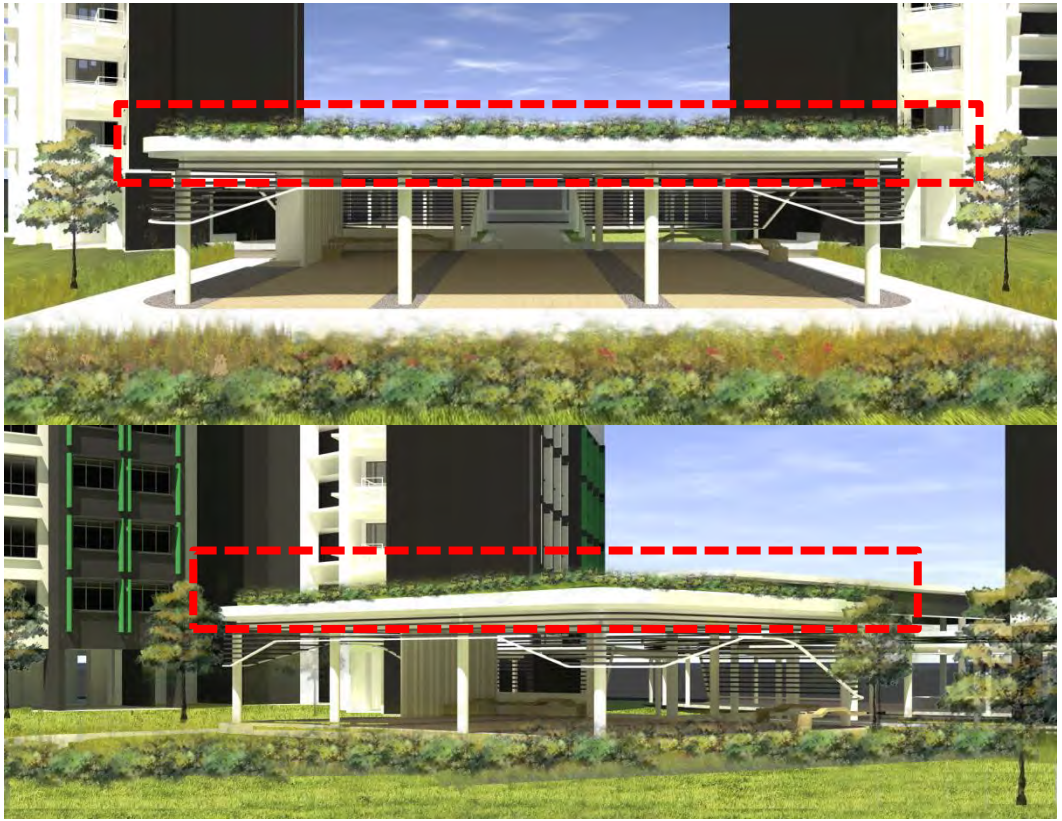

Precinct Pavilion (Guide 2)

Design Consideration:
Green Roof access for maintenance .

Risk:
Death/Injury.

Hazards Identified:
Fall from height during maintenance of green roof.

Can this hazards be designed out/mitigated ?
Yes

Measures
To design access to roof and provision for life line

Follow Up
GUIDE 2

Action By
Architect

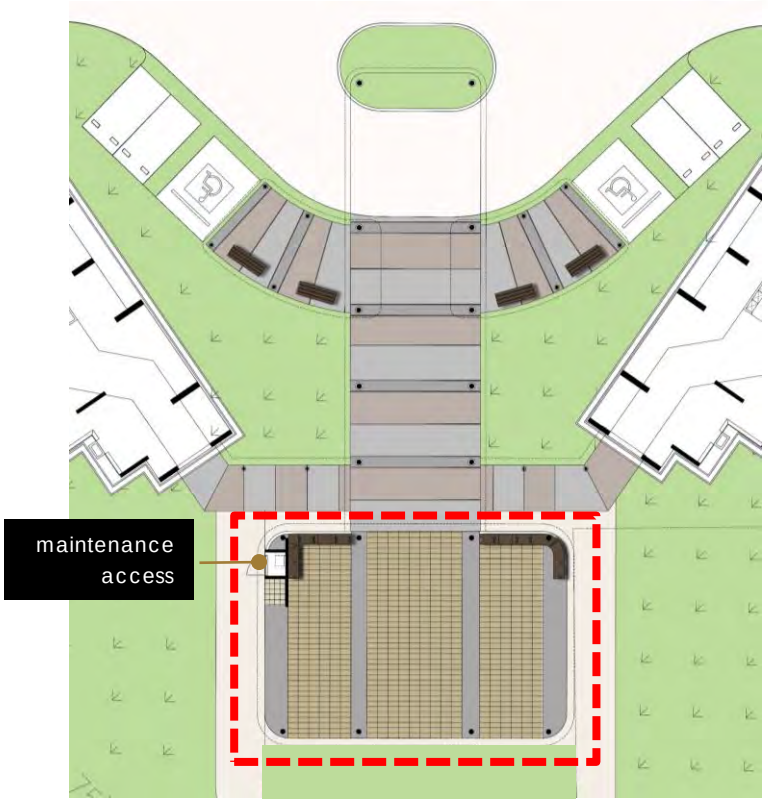

Precinct Pavilion (Guide 2)

Design Consideration:
Green Roof access for maintenance .

Risk:
Death/Injury.

Hazards Identified:
Fall from height during maintenance of green roof.

Can this hazards be designed out/mitigated ?
Yes

Measures
To design access to roof and provision for life line

Follow Up
GUIDE 2

Action By
Architect

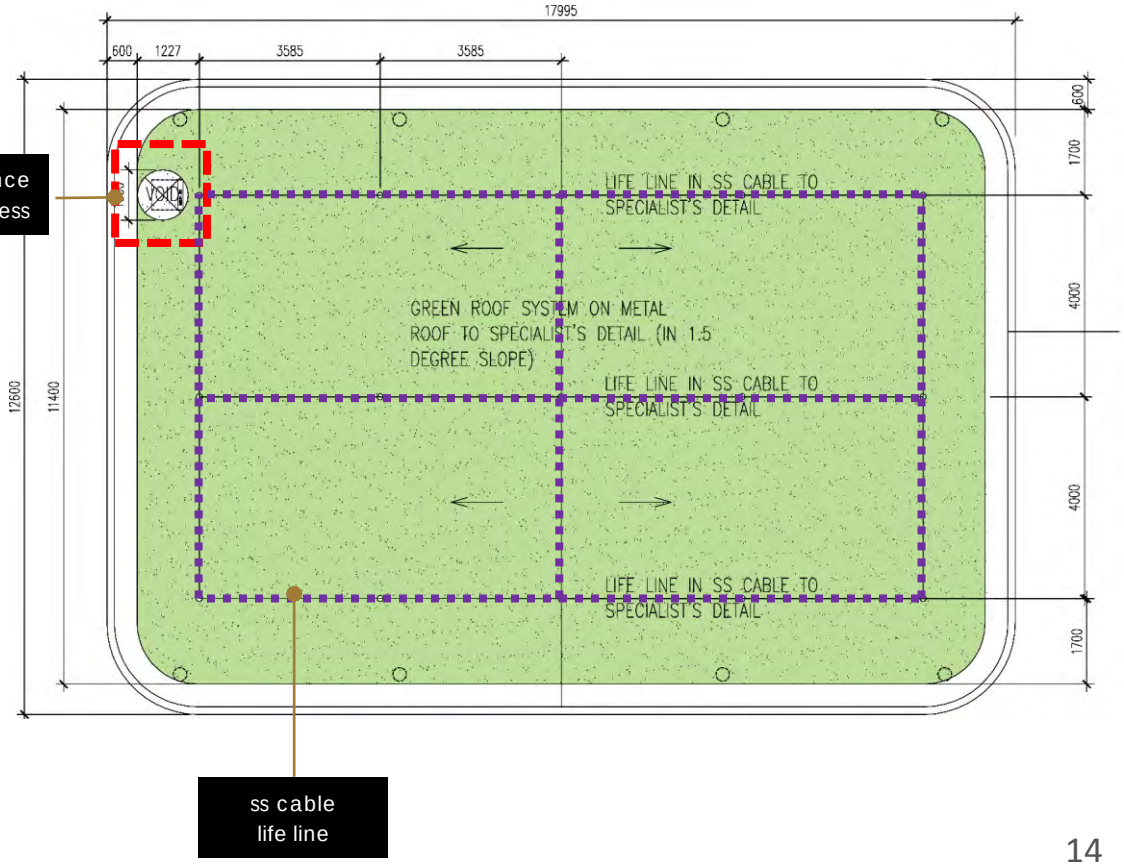

Link Bridge (Guide 2)

Design Consideration:
Access for maintenance

Risk:
Death/Injury

Hazards Identified:
Falling from height while access for maintenance and repair of link bridge

Can this hazards be designed out/mitigated ?
Yes

Measures
To design rope acess provsion in the slab by provining holes in slab

Follow Up
GUIDE 2

Action By
Architect and Engineer



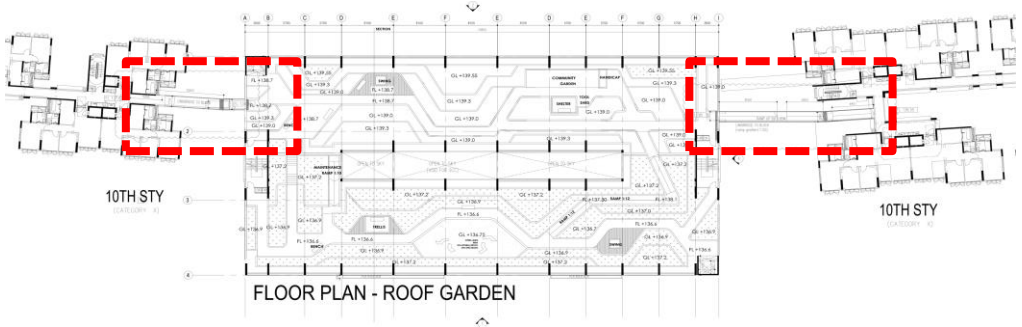

Link Bridge (Guide 2)

Design Consideration:
Access for maintenance

Risk:
Death/Injury

Hazards Identified:
Falling from height while access for maintenance and repair of link bridge

Can this hazards be designed out/mitigated ?
Yes

Measures
To design rope acess provsion in the slab by provining holes in slab

Follow Up
GUIDE 2

Action By
Architect and Engineer

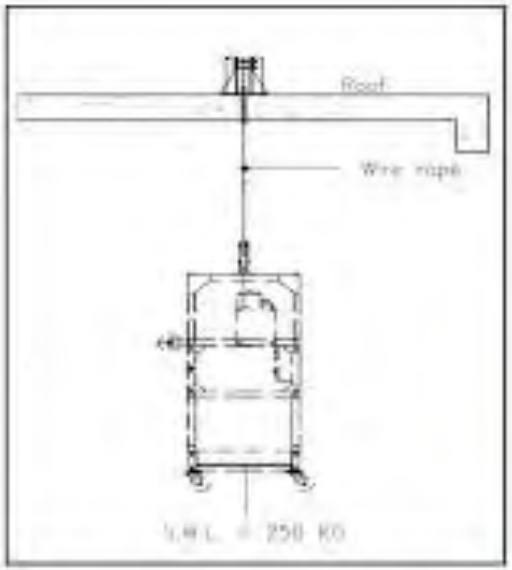





Roof Garden (Guide 2)

Design Consideration:
Public and Maintenance Access at Roof Garden.

Risk:
Death/Injury.

Hazards Identified:
Fall from height during public enjoyment and maintenance of roof garden.

Can this hazards be designed out/mitigated ?
Yes

Measures
To design for maintenance access and safety setback for public enjoyment

Follow Up
GUIDE 2

Action By
Architect

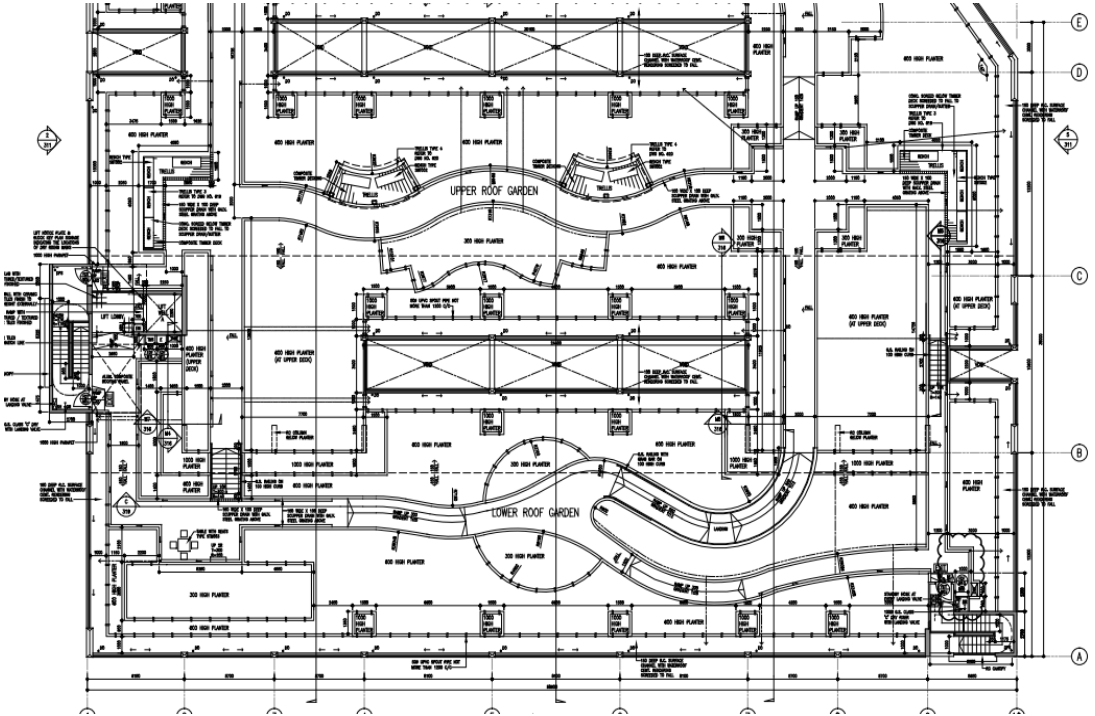

Roof Garden (Guide 2)

Design Consideration:
Public and Maintenance Access at Roof Garden.

Risk:
Death/Injury.

Hazards Identified:
Fall from height during public enjoyment and maintenance of roof garden.

Can this hazards be designed out/mitigated ?
Yes

Measures
To design for maintenance access and safety setback for public enjoyment

Follow Up
GUIDE 2

Action By
Architect

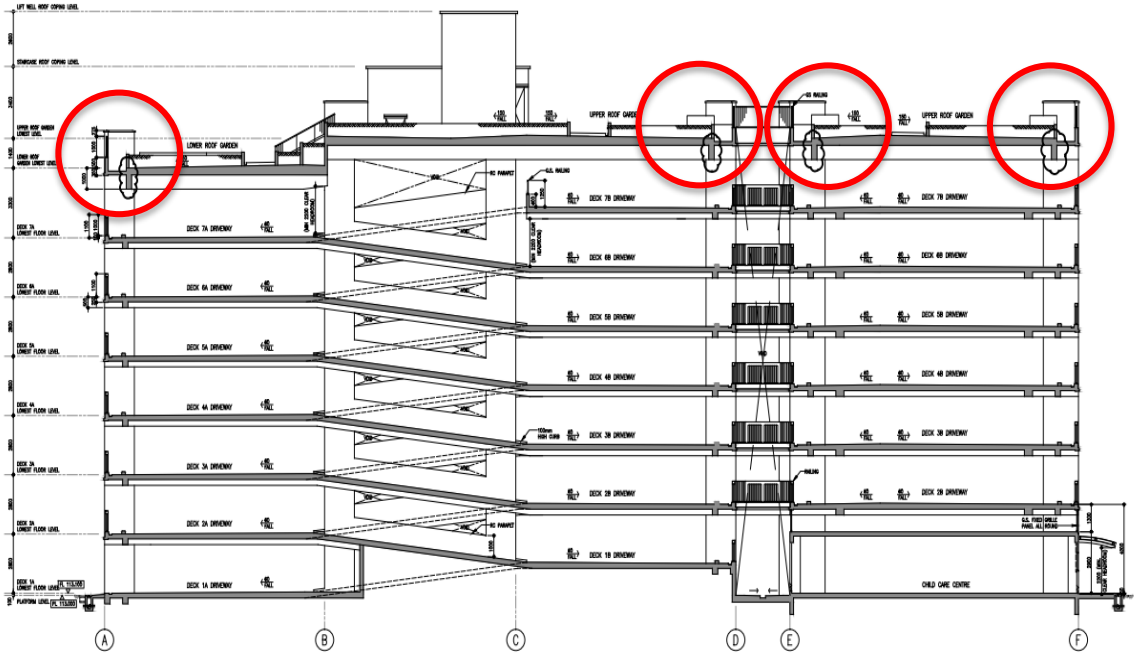

Roof Garden (Guide 2)

Design Consideration:
Public and Maintenance Access at Roof Garden.

Risk:
Death/Injury.

Hazards Identified:
Fall from height during public enjoyment and maintenance of roof garden.

Can this hazards be designed out/mitigated ?
Yes

Measures
To design for maintenance access and safety setback for public enjoyment

Follow Up
GUIDE 2

Action By
Architect

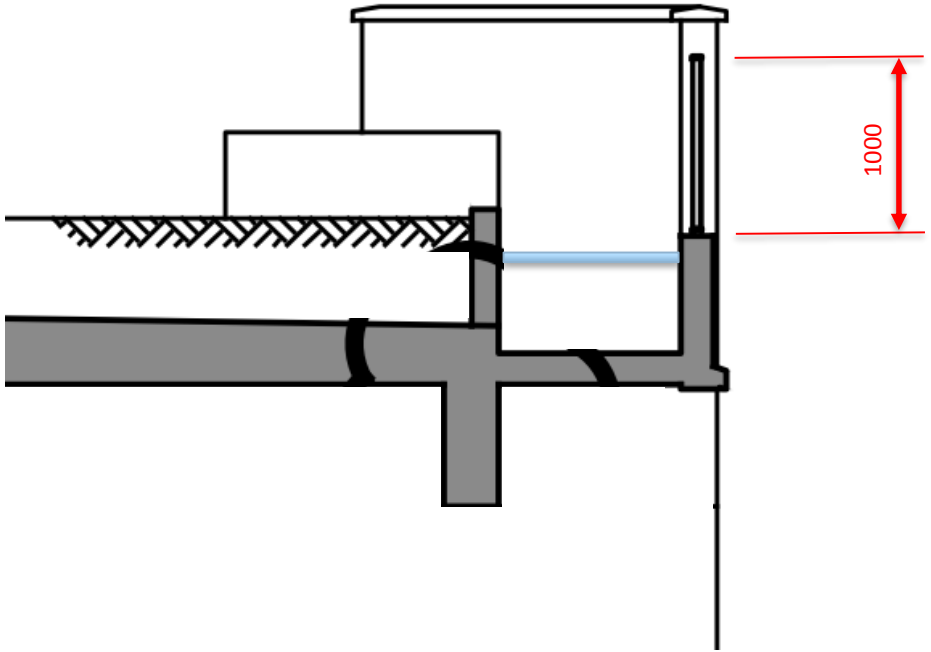

Thank You

SURBANA JURONG

