socomec
Innovative Power Solutions

Higher Energy Performance
Standards and Accuracy



Wilson ONG (Specification Manager, SEA)

CRITICAL POWER | POWER CONTROL & SAFETY | SOLAR POWER | ENERGY EFFICIENCY

Samsung

Tag Huerer

THE GLOBAL COMPACT WE SUPPORT

ENERGY SPECIALIST SINCE 1922

About the Speaker



WILSON ONG

- 1993 B.Eng (Hons, Elect) NUS
- 1993 – 1996 Indeco Consultants
- 1996 G Dip (MM) SIM
- 1996 – 2014 Schneider Electric
- 2006 Emerging Leaders Program SMU
- Since 2014 Regional Specification Manager Socomec AP
- Former member of SPRING technical committee of CP5 (Electrical Installation) and SS555 (Lightning Protection) in Singapore
- Conducted numerous seminars in Singapore, Malaysia and Philippines

SOCOMEC Group

Key figures

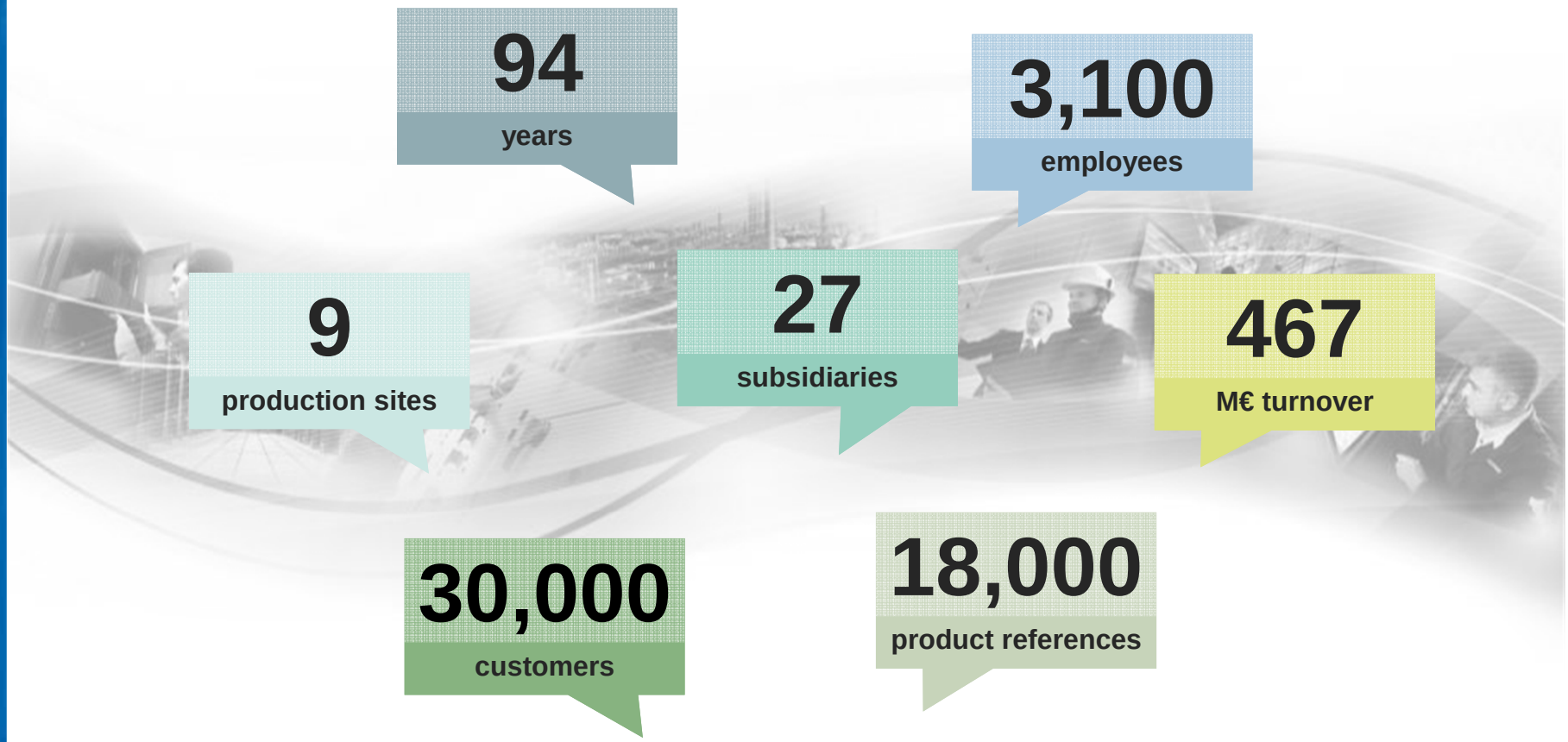

SOCOMEC Group

4 areas of expertise

Power Control & Safety

Managing power and protecting people, equipment and installations

Expert Services

Enabling available, safe and efficient energy



Critical Power

Ensuring the availability of high-quality power for critical applications

Energy Efficiency

Improving the energy performance of buildings and installations

TESLA LAB – the 3rd most powerful lab in Europe

> 5M€
invested since 2011

30
experts

2,000m²
surface area

100kA 1s
short-circuit capacities

Tesla LAB
Power Testing & Certification

over 4,000
references of products certified by lab testing

3
platforms for nominal & overload endurance tests

12,000A
current source

over 1,000
tests / year

SOCOMEC Group

In a Few Words

- Independent, Family Owned
- A Specialist in our chosen fields,
- Heritage, Experience & Vision
- Strong Culture, People orientated
- Conception, Design & Manufacture
- Global Player
- Customer Proximity & Service mind-set
- Entrepreneurial Spirit & Constant Innovation
- High level of Investment
  - laboratory, R&D…







Benefit from the experience of a world leader in industrial switching

100 years
of expertise

4th range
of DC & PV disconnect
Since 2006

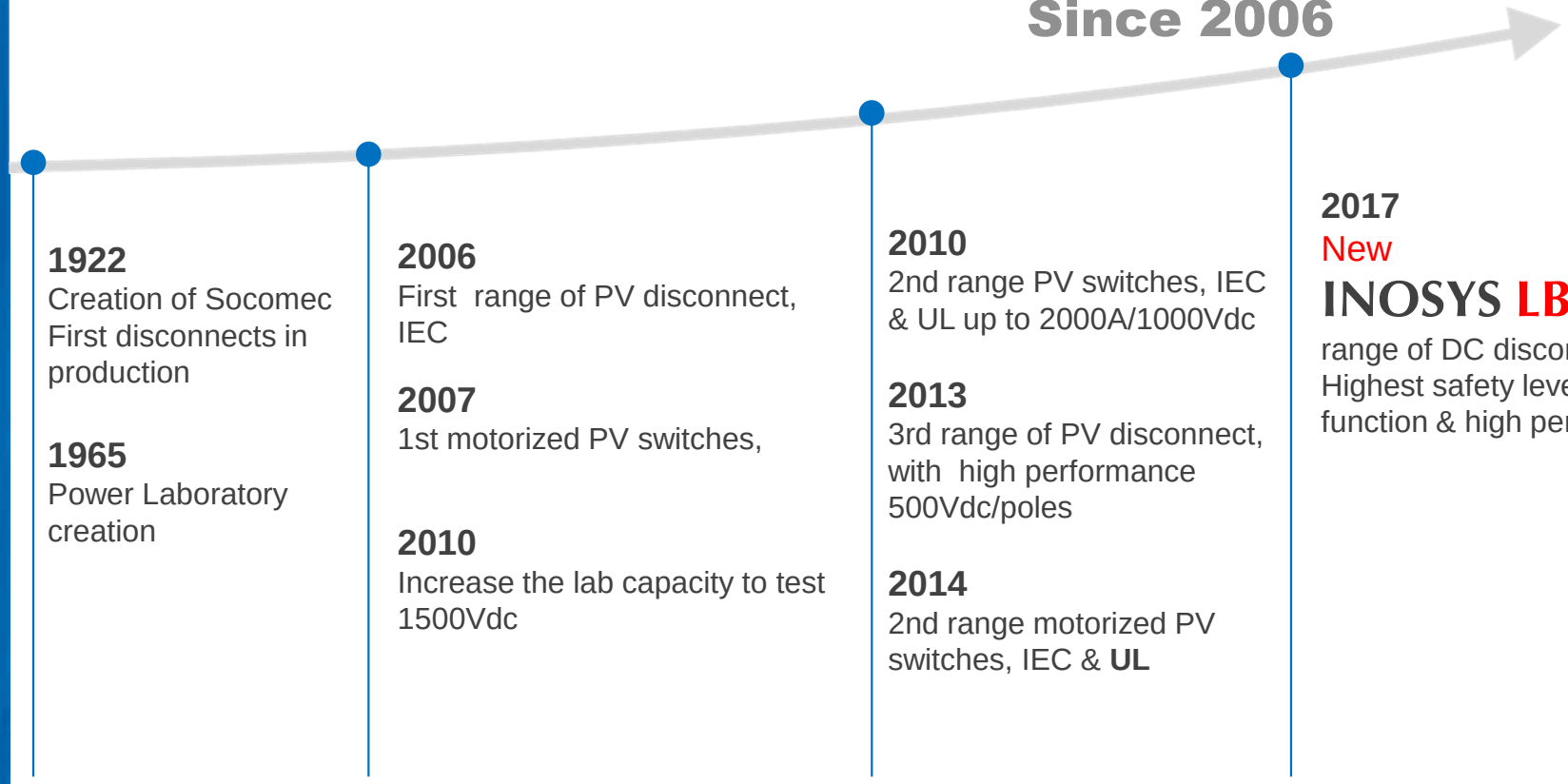

1922
Creation of Socomec
First disconnects in production

1965
Power Laboratory creation

2006
First range of PV disconnect, IEC

2007
1st motorized PV switches,

2010
Increase the lab capacity to test 1500Vdc

2010
2nd range PV switches, IEC & UL up to 2000A/1000Vdc

2013
3rd range of PV disconnect, with high performance 500Vdc/poles

2014
2nd range motorized PV switches, IEC & **UL**

2017
New
INOSYS LBS
range of DC disconnect
Highest safety level, tripping function & high performance

Learning Objectives

- IEC 61869-2, Standard for Sensors
- Standard vs ‘S’ Class Current Sensor
- IEC 61557-12, Standard for PMD
- Overall Accuracy Class as per IEC 61557-12
- Accuracy Recommendation as per IEC 61557-12
- Presentation on load curves, consumption, trends, PF, THD, unbalance, Neutral, etc
- Presentation on Innovative Energy Management Solution – “Digiware”
- Digiware videos (New and retrofit)
- Live Digiware Demo

Existing Specification EMS

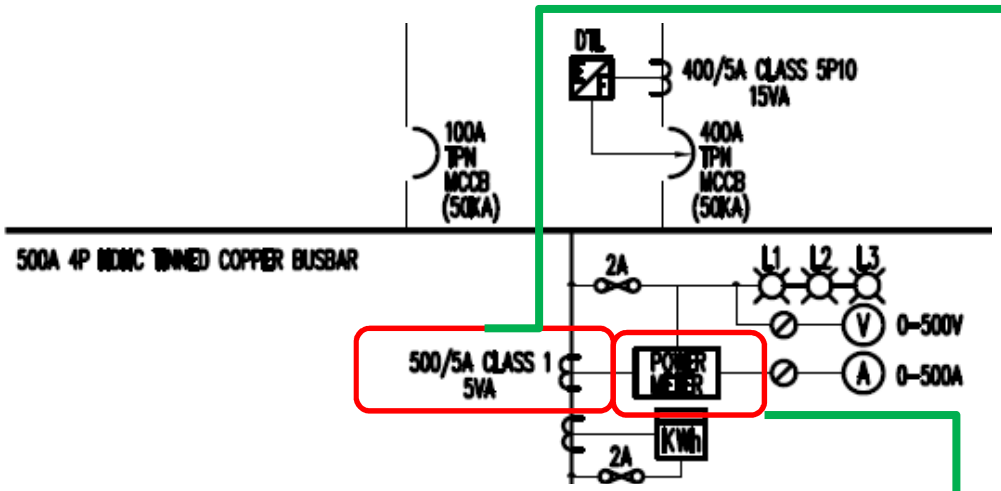

IEC 61869-2

IEC 61557-12



Part 1 : IEC Standards

- IEC 61869-2 (CT)
- IEC 61557-12 (PMD)

IEC 61869-2

Edition 1.0 2012-09

INTERNATIONAL STANDARD

NORME INTERNATIONALE

Instrument transformers –
Part 2: Additional requirements for current transformers

Transformateurs de mesure –
Partie 2: Exigences supplémentaires concernant les transformateurs de courant

IEC 61557-12

Edition 1.0 2007-08

INTERNATIONAL STANDARD

NORME INTERNATIONALE

Electrical safety in low voltage distribution systems up to 1 000 V a.c. and 1 500 V d.c. – Equipment for testing, measuring or monitoring of protective measures –
Part 12: Performance measuring and monitoring devices (PMD)

Sécurité électrique dans les réseaux de distribution basse tension de 1 000 V c.a. et 1 500 V c.c. – Dispositifs de contrôle, de mesure ou de surveillance de mesures de protection –
Partie 12: Dispositifs de mesure et de surveillance des performances (PMD)



IEC 61869-2

Additional Requirements for Current Transformers

IEC 61869-2

PRODUCT FAMILY STANDARDS		PRODUCT STANDARD	PRODUCTS	OLD STANDARD
61869-1 GENERAL REQUIREMENTS FOR INSTRUMENT TRANSFORMERS		61869-2	CURRENT TRANSFORMERS	60044-1
		61869-3	INDUCTIVE VOLTAGE TRANSFORMERS	60044-2
		61869-4	COMBINED TRANSFORMERS	60044-3
		61869-5	CAPACITIVE VOLTAGE TRANSFORMERS	60044-5
		61869-6	CURRENT TRANSFORMERS FOR TRANSIENT PERFORMANCE	60044-6
	61869-9 ADDITIONAL REQUIREMENTS AND DIGITAL INTERFACE FOR ELECTRONIC INSTRUMENT TRANSFORMERS	61869-7	ELECTRONIC VOLTAGE TRANSFORMERS	60044-7
		61869-8	ELECTRONIC CURRENT TRANSFORMERS	60044-8
		61869-10	LOW-POWER STAND-ALONE CURRENT SENSORS	

IEC 61869-2
Characteristics

- Define 2 main categories of current sensor :



1. For Measurement
   - For transmitting an information signal to measuring devices or counters

2. For Protection
   - For transmitting an information signal to devices for protection and control
   - Different variants exist depending on type of loads to be protected (P, Class X, etc)

IEC 61869-2
Characteristics

Honey Bees

Rated operational voltage (Un)	: 720V
Rated frequency	: 50/60Hz
Ambient temperature	: -5/40 deg C
Operating humidity	: up to 95% relative humidity
Rated short time thermal current (Ith)	: 50kA
Rated dynamic current (Idyn)	: 2.55 x Ith
Insulation	: between primary /secondary conductor >
	: between toriod core/secondary conducto
Dielectric strength	: 2kV 1 minutes
Thermal class of insulation	: B
Casing	: non-flammable, polycarbonate self extingu
Index of protection – casing	: IP20
Index of protection – cover	: sealable IP20
Accuracy class	: Measuring 0.5, 1, 3
	: Protection 5P, 10P
Burden	: ranging from 3 – 30VA
Rated primary current	: ranging from up to 6000A
Rated secondary current	: …/5A or …/1A







IEC 61869-2

List of tests

- 4 Type tests (temp-rise, impulse voltage withstand, accuracy, short time current)
- 6 Routine tests (power freq voltage withstand, accuracy)
- 2 Special tests (Capacitance and DDF, Internal arc fault)
- 2 Sample tests (RF, FS)

Accuracy Range

Standard vs S Class

Current measured	0.5-class transformer	0.5S-class transformer
1% In < I < 5% In	-	1.5%
5% In < I < 20% In	1.5%	0.75%
20% In < I < 100% In	0.75%	0.5%
100% In < I < 120% In	0.5%	0.5%

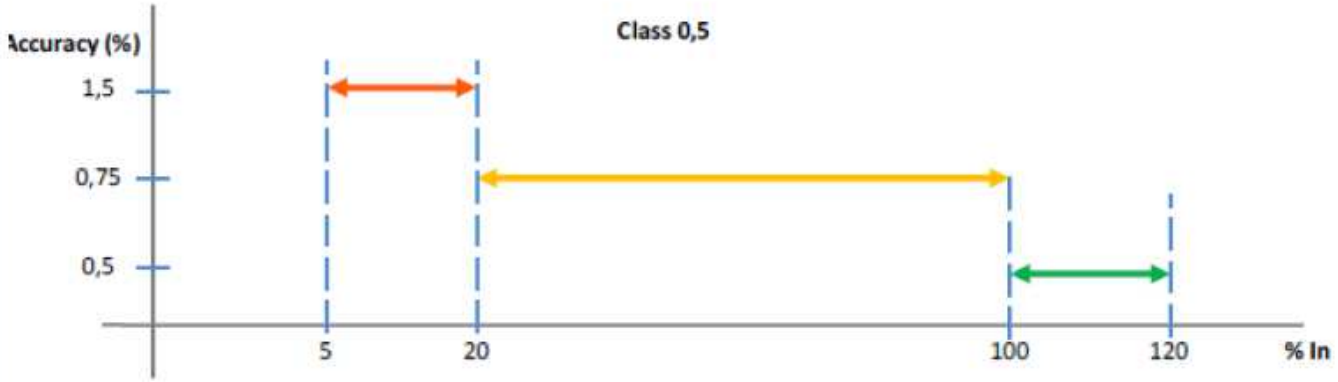



socomec
innovative Power Solutions

Accuracy Range
Standard vs S Class

- Class of accuracy standard « 0,1 - 0,2 - 0,5 - 1 - 3 - 5 » :
  - Accuracy is guaranteed at 100 - 120% of In (cl 0.1-1)
    or 50 à 120% of In (cl 3 & 5)

Accuracy class	Ratio error ± % at current (% of rated)			
	5	20	100	120
0,1	0,4	0,2	0,1	0,1
0,2	0,75	0,35	0,2	0,2
0,5	1,5	0,75	0,5	0,5
1	3,0	1,5	1,0	1,0

Class	Ratio error ± % at current (% of rated)	
	50	120
3	3	3
5	5	5

- Class of accuracy S « 0,2S - 0,5S » :
  - Sensors whose accuracy is guaranteed at 20 to120% of In,

Accuracy class	Ratio error ± % at current (% of rated)				
	1	5	20	100	120
0,2 S	0,75	0,35	0,2	0,2	0,2
0,5 S	1,5	0,75	0,5	0,5	0,5

Accuracy Range
Standard vs S Class

- This class difference has significant importance in an EE project, it ensures accurate measurement regardless of the load levels.

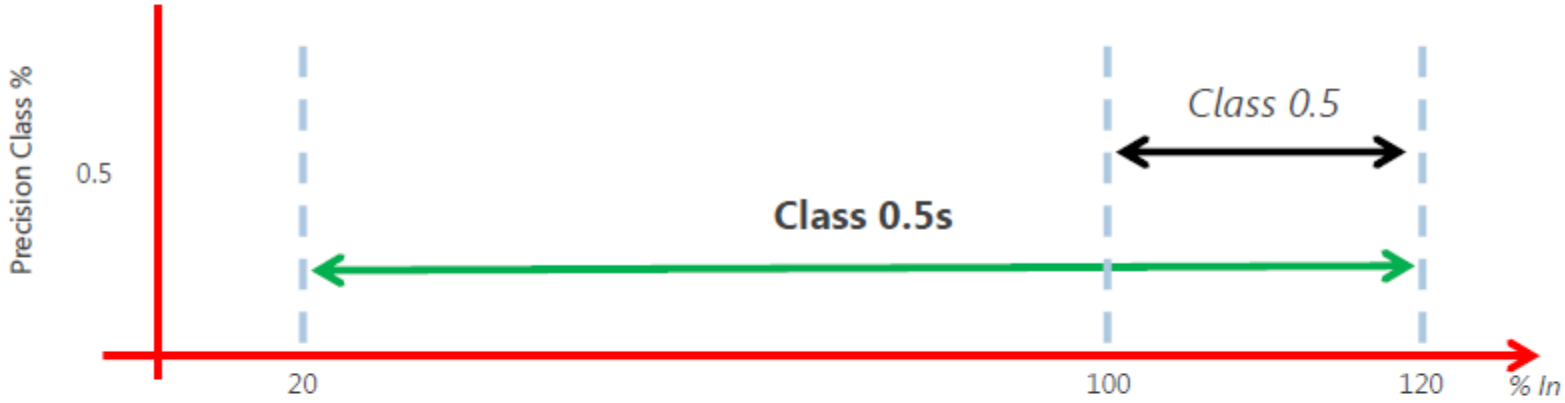

- Effective on loads with low levels of consumption, and / or when the size of the sensor is related to protection.



IEC 61557-12

Performance Monitoring and Measuring Device (PMD)

IEC 61557-12

Architecture of a PMD

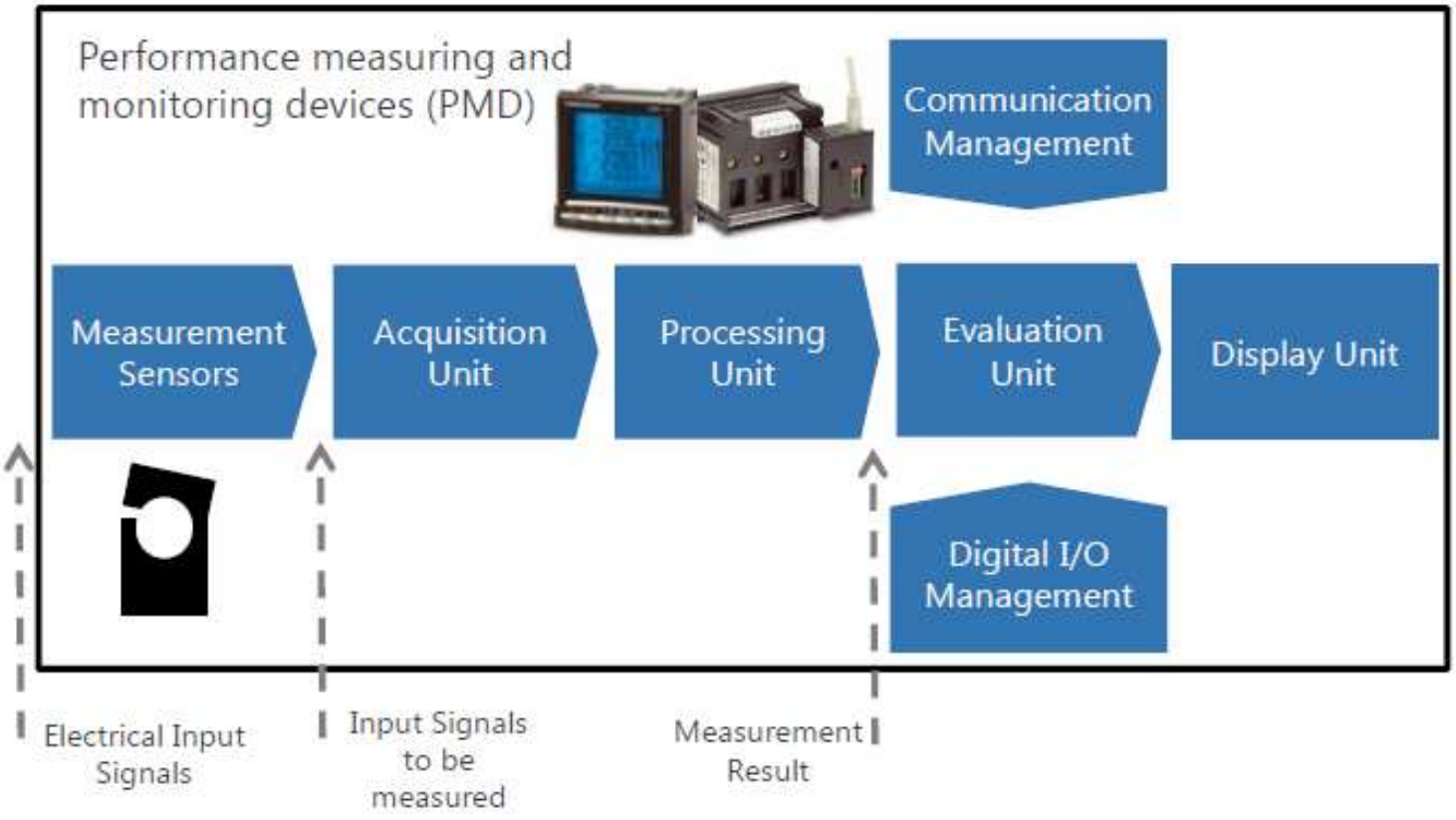

socomec
Innovative Power Solutions

IEC 61557-12
Classification

Depending on the presence or absence of measurement sensors, there are several types of PMD

		Current Measurement	
		Sensor Operated PMD (current sensors out of PMD) → PMD Sx	Direct connected PMD (current sensors in PMD) → PMD Dx
Voltage Measurement	Direct connected PMD (Voltage sensors in PMD) → PMD xD	PMD SD LT (Semi-direct insertion)	PMD DD LT (Direct insertion)
	Sensor operated PMD (voltage sensors out of PMD) → PMD xS	PMD SS HT (Indirect insertion)	PMD DS (Semi-direct insertion)

IEC 61557-12
Classification

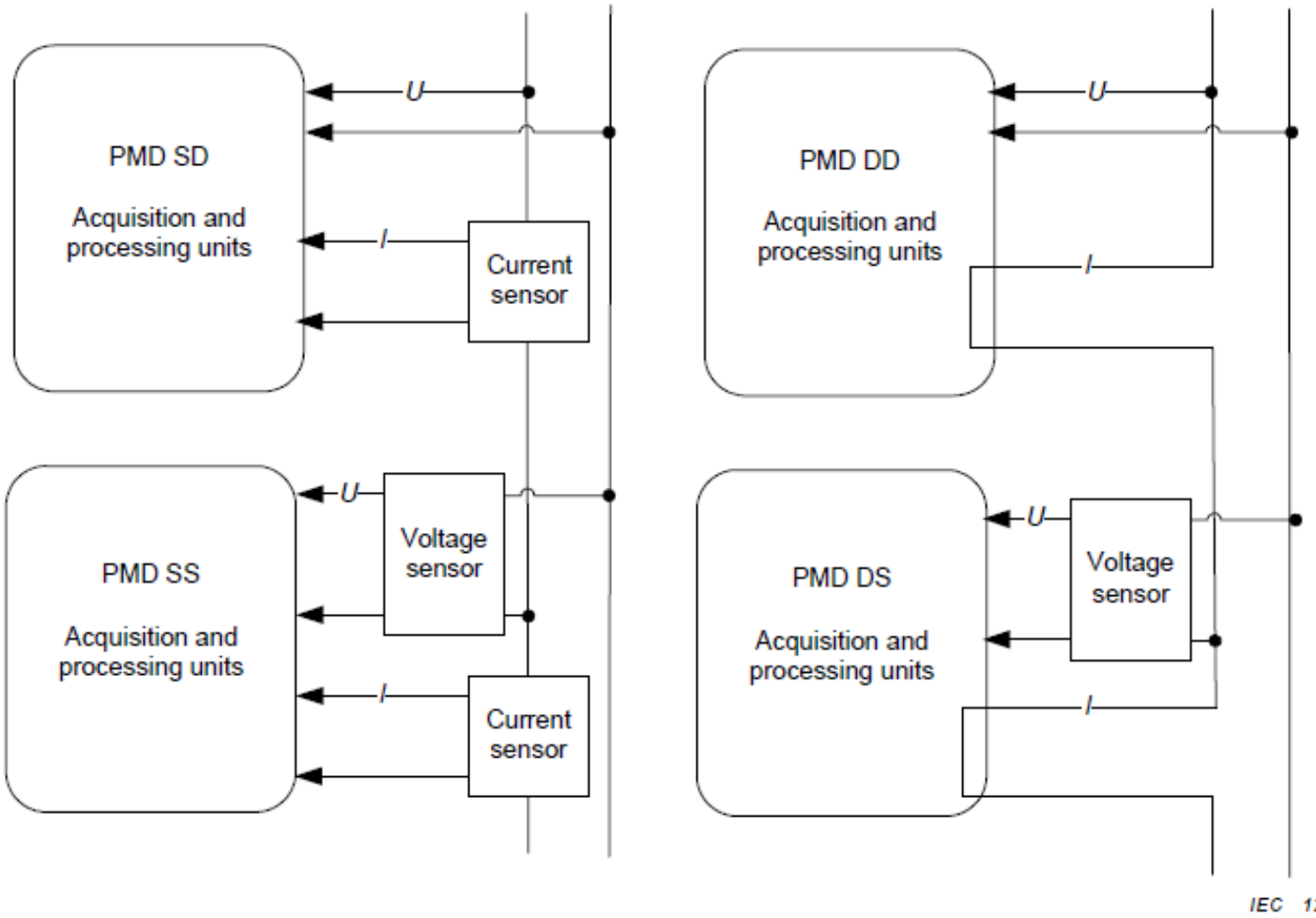

socomec
Innovative Power Solutions

IEC 61557-12

List of tests

- 14 Type tests (temp influence, climatic, EMC, start up, P, PF, f, dips and swells, voltage interruptions, harmonics)
- 3 Routine tests (protective bonding, dielectric strength, uncertainty)

Accuracy Range

PMD Dx and Sx

Table 8 – Intrinsic uncertainty table for active power and active energy measurement

Specified measuring range		Power factor [d]	Intrinsic uncertainty limits for PMD of function performance class C [a b c]		Unit
Value of current for Direct connected PMD Dx	Value of current for Sensor operated PMD Sx		for $C < 1$	for $C \geq 1$	
$2\ \%I_b \leq I < 10\ \%I_b$	$1\ \%I_n \leq I < 5\ \%I_n$	1	$\pm 2{,}0 \times C$	No requirement	%
$5\ \%I_b \leq I < 10\ \%I_b$	$2\ \%I_n \leq I < 5\ \%I_n$	1	No requirement	$\pm(1{,}0 \times C + 0{,}5)$	%
$10\ \%I_b \leq I \leq I_{max}$	$5\ \%I_n \leq I \leq I_{max}$	1	$\pm 1{,}0 \times C$	$\pm 1{,}0 \times C$	%
$5\ \%I_b \leq I < 20\ \%I_b$	$2\ \%I_n \leq I < 10\ \%I_n$	0,5 inductive 0,8 capacitive	$\pm(1{,}7 \times C + 0{,}15)$ $\pm(1{,}7 \times C + 0{,}15)$	No requirement No requirement	%
$10\ \%I_b \leq I < 20\ \%I_b$	$5\ \%I_n \leq I < 10\ \%I_n$	0,5 inductive 0,8 capacitive	No requirement No requirement	$\pm(1{,}0 \times C + 0{,}5)$ $\pm(1{,}0 \times C + 0{,}5)$	%
$20\ \%I_b \leq I \leq I_{max}$	$10\ \%I_n \leq I \leq I_{max}$	0,5 inductive 0,8 capacitive	$\pm(1{,}0 \times C + 0{,}1)$ $\pm(1{,}0 \times C + 0{,}1)$	$\pm 1{,}0 \times C$ $\pm 1{,}0 \times C$	%

Accuracy Range

PMD with External CT

Measurement range Value of the current for PMDs with external current sensor (PMD Sx)	Power factor	Restrictions to intrinsic uncertainty for PMDs of operating performance class C	Unit
1% In ≤ I < 5% In	1	± 2 x C	%
5% In ≤ I ≤ 120% In	1	± 1 x C	%
2% In ≤ I < 10% In	0.5 inductive 0.8 capacitive	± (1.7 x C +0.15) ± (1.7 x C +0.15)	% %
10% In ≤ I ≤ 120% In	0.5 inductive 0.8 capacitive	± (1 x C + 0.1) ± (1 x C + 0.1)	% %

C = PMD accuracy class with C<1
Imax = 120% In

Figure 3 – Summary table with an external current sensor

Example of a 0.5-class measuring device with a power factor = 1 and Imax = 120% In

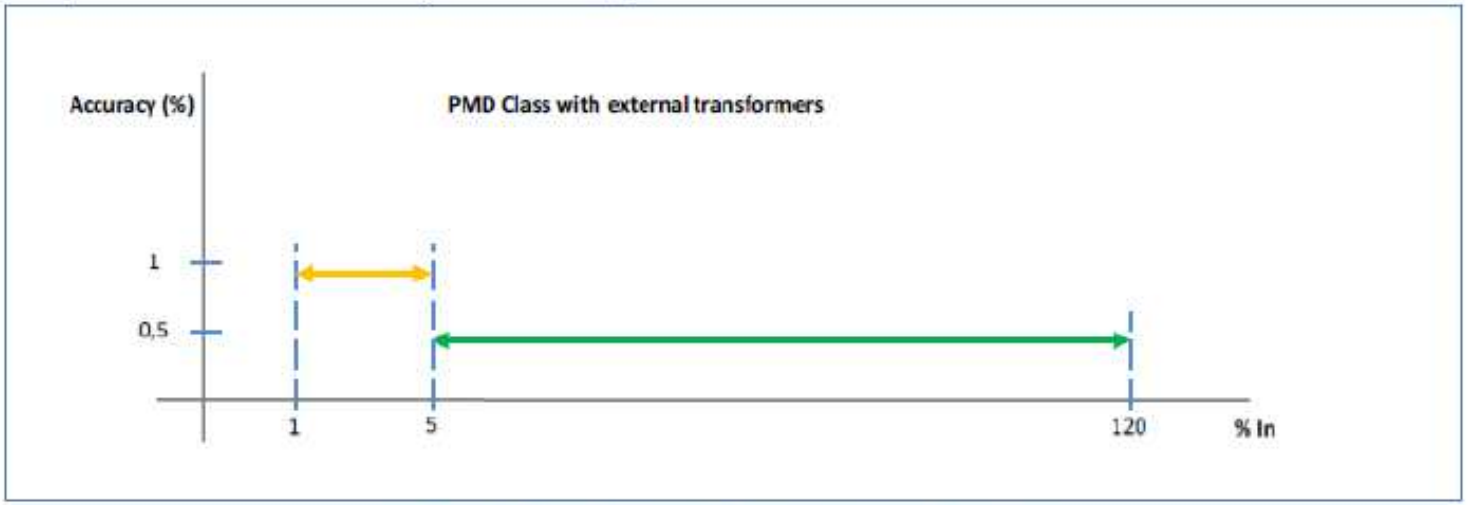

Figure 4 - PMD Class with external transformers

IEC 61557-12

Overall system performance class

Overall system performance class =

$$1.15x\sqrt{Class(current_sensors)^2 + Class(voltage_sensors)^2 + Performance_class(PMD_SS)^2}$$

- This formula is statistical, it does not guarantee absolutely the result.
- Valid only for power factor (PF) = 1.
  - The phase error directly affects the accuracy of measurements of the sensors when the PF is not equal to 1,
  - i.e : A phase error 20min for PF = 0.5 adds 1% error on the accuracy of the measurement of power and energy.

IEC 61557-12
Recommendations

Performance class of the PMD without external sensors	Recommended sensor class to associate to the PMD [b] [c]	Expected performance class for PMD-SS including their external sensors	maximum possible sensor class to associate to the PMD [a]
0,1	0,1 or below	0,2	0,2
0,2	0,2 or below	0,5	0,5
0,5	0,5 or below	1	1
1	1 or below	2	2
2	2 or below	5	5
5	5 or below	10	

- In addition, if a class of important overall accuracy is required, the standard strongly recommends the use of sensors class 0,2S to 0,5S.

IEC 61557-12
Recommendations

Accuracy (Practise)			
Location	PMD	Electricity Meter	Sensor
Incomer	0.5-1	0.5-1	1
MSB	1	1	1
Sub Board	1-3	1-3	1
Final Distrib'n	1.5	3	1-3



Accuracy (Recommended)			
Location	PMD	Electricity Meter	Sensor
Incomer	0.2-1	0.2-1	Match
MSB	0.5-2	0.5-2	Match
Sub Board	1-3	1-3	Match
Final Distrib'n	1-3	1-3	Match



Part 2 :

Why is *Accuracy* Important ?

Energy Performance Plan

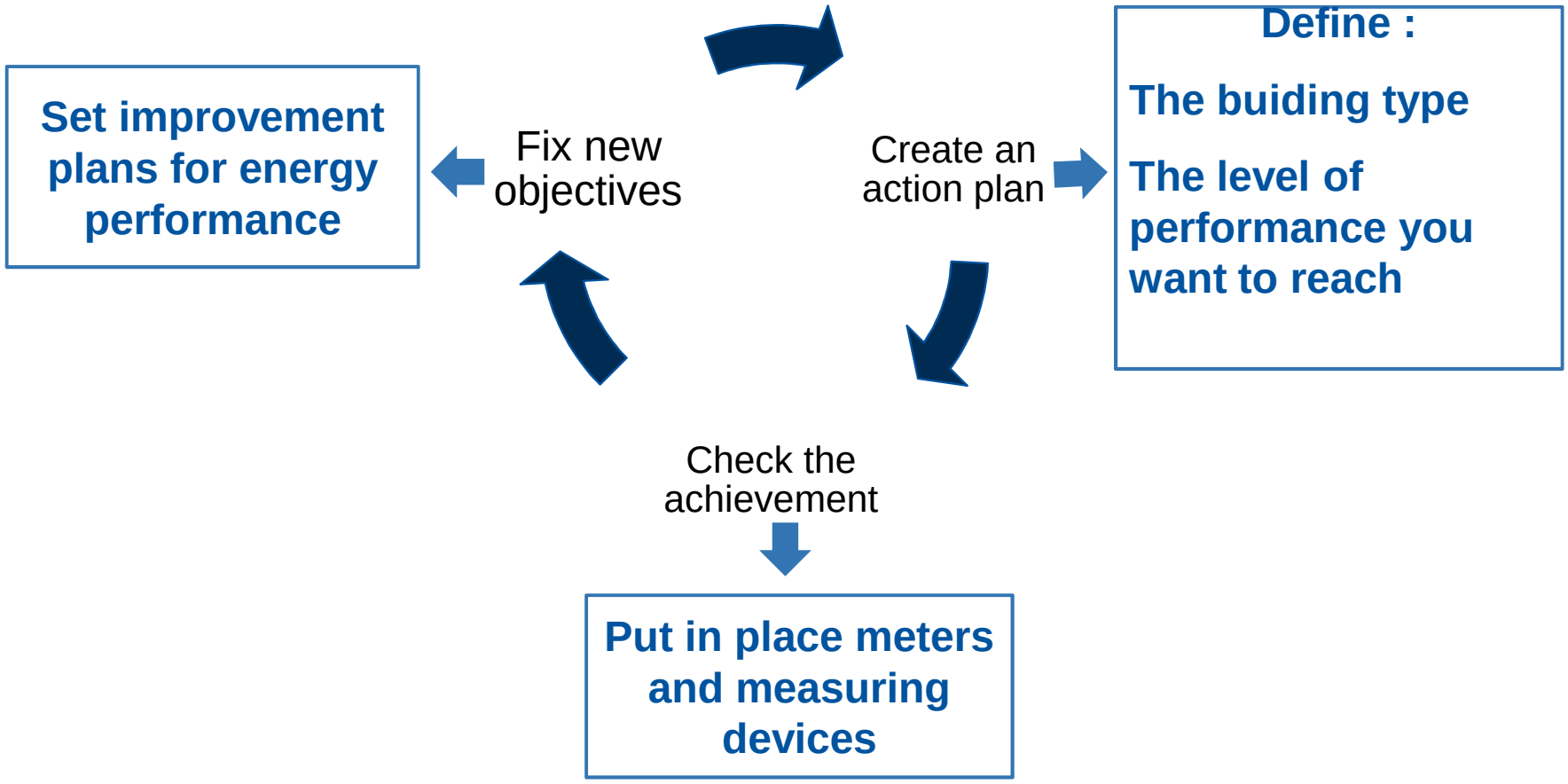

Watch Accuracy

Mechanical Movements



Mechanical watch movements - whether an automatic wind or a manual wind - are comprised of small gears, miniature screws and paper-thin springs. To combine all these miniscule pieces, and create a working, accurate watch is an amazing feat to begin with.

Mechanical wristwatches, especially modern ones with jeweled movements, can last forever with the right care. They can, as well, be brought back to life if in reasonable condition.

Accuracy of Mechanical Wristwatches - What to Expect

In the world of mechanics, anything assembled of small parts which are capable of maintaining 9 top-tiered piece of machinery. To put things in perspective, if a watch is only 99.9% accurate it wo per day, which is unacceptable in the luxury watch world.

Accuracy is dependant on a few variables, such as:

1. **Position:** Due to gravity a watch will gain or loose more time if laid to rest in a single positio adjusted to compensate for losses and gains in different positions. An adjusted watch shou specification when worn throughout the day. If you remove the watch at night you may wan compensate for drift during wear.

   Watches are typically adju
   1. Dial Up
   2. Crown Down
   3. Dial Down
   4. Crown Left

1. **Position:** Due to gravity a watch will gain or loose more time if laid to rest in a single po adjusted to compensate for losses and gains in different positions. An adjusted watch specification when worn throughout the day. If you remove the watch at night you may compensate for drift during wear.

   Watches are typically adjusted to between 2 - 8 positions:
   1. Dial Up
   2. Crown Down
   3. Dial Down
   4. Crown Left
   5. Crown Up
   6. Crown Right
   7. Half-way position crown up
   8. Half-way position crown down

   A watch adjust to 2 positions has been adjusted to the first 2 positions, a watch that ha generally been adjusted to the above 4 positions and so on.

2. **Temperature:** The environment may have an impact on how accurate the watch operates. Temperature changes expand and contract many of the parts, changing the dimension and shapes - especially the balance wheel and hairspring. In modern watches most materials and designs are able to compensate for the changes and maintain a consistent rate. This is generally not a problem unless the watch is by a very simple



The standard acceptable accuracy of mechanical wristwatches is as follows:

Modern Mechanical non-COSC Certified watch		
Worst Case Scenario	+/-10 seconds per day	99.988% accuracy
Typical	+/-5 seconds per day	99.994% accuracy
Excellent	+/-3 seconds per day	99.996% accuracy

Modern Mechanical COSC Certified watch		
Worst Case Scenario	+6/-4 seconds per day	99.994% accuracy
Typical	+/-3 seconds per day	99.996% accuracy
Excellent	+/-1 seconds per day	99.998% accuracy

omec Power Solutions

3 Main Reasons

- Earning achievement has to be evaluated by adding individual measurements which have to be accurate to avoid accumulation errors
- Energy gains targeted become more and more difficult to achieve (Exact Savings or Error ?)
- Replacement of existing loads by more efficient ones may bring different PF, high accuracy equipment is therefore required



Part 3 : Other *Accuracy* Issues

1. Impact on consumption measurement
2. Influence of CT phase error
3. Influence of cable length

Impact on consumption measurement

- Example
  - 3-phase 4-wire network (3 x 230/400 Vac) with PF= 1
  - PMD Class 0.5 and CT Class 0.5 or 1
  - Multiple loads with rated currents of 1000A, 600A and 250A
  - kWh cost = € 0.04

Consumption measurement errors over 1 year:

Nominal current (A)	PMD Class	CT Class	Global accuracy at In	Active power (kW)	Active energy cumulated on 1 year (kWh)	Error annual consumption (kWh)	Δ energy cost
1000	0,5	0,5	0,81	690	6 044 400	49 151	1 966 €
600	0,5	0,5	0,81	414	3 626 640	29 491	1 180 €
250	0,5	0,5	0,81	173	1 511 100	12 288	492 €
250	0,5	1	1,29	173	1 511 100	19 429	777 €

Accuracy class and nominal current have direct impact on consumption measurement error

Influence of CT Phase Error

- Example: PF= 0.5 / CT phase error = 0.3°
  - PF= 0.5 / Error = 0.3° ➔ PF= 0.495 (cos [60°+0.3°])
  - P (Active power) = PF (Power Factor) x S (Apparent power)

➔ Additional error on P measurement :

$$\frac{Ptrue - Pmeasured}{Ptrue} = \frac{0,5 - 0,495}{0,5} = 1\%$$

CT phase error affects P & E measurements
if PF < 1

Influence of Cable Length

- Cable losses have to be taken into account for current sensor choice

Current sensor output power (VA) > PMD input power (VA) + cable losses (VA)

- Losses in the cables

$$\text{Losses in VA} = \frac{I^2(A) \times 2}{S(mm^2) \times 56} \times L(m)$$

I: Current to the CT secondary
L: Distance between the CT and the PMD
S: Section of cable

- Example
  - 5A current sensor
  - Cable length between PMD and Sensor = 1m / cable section = 2.5mm^2
  - PMD consumption= 0.1VA
  - Calculated cable losses= 0.36VA ➔ CT output power has to be > **0.46VA**

Cables losses can reduce accuracy !



Part 4 : Socomec Solution

DIRIS Digiware

Metering Solution Redefine

Digiware New

socomec
Innovative Power Solutions



DIRIS Digiware

Measurement and monitoring system
for electrical installations
multi-circuit plug & play

DIRIS Digiware

The promises …

- 2 x times less expensive installed
- 2 x times faster to commission
- 2 x times more accurate

DIRIS Digiware

Concept

Mutualise for simplify and reduce costs

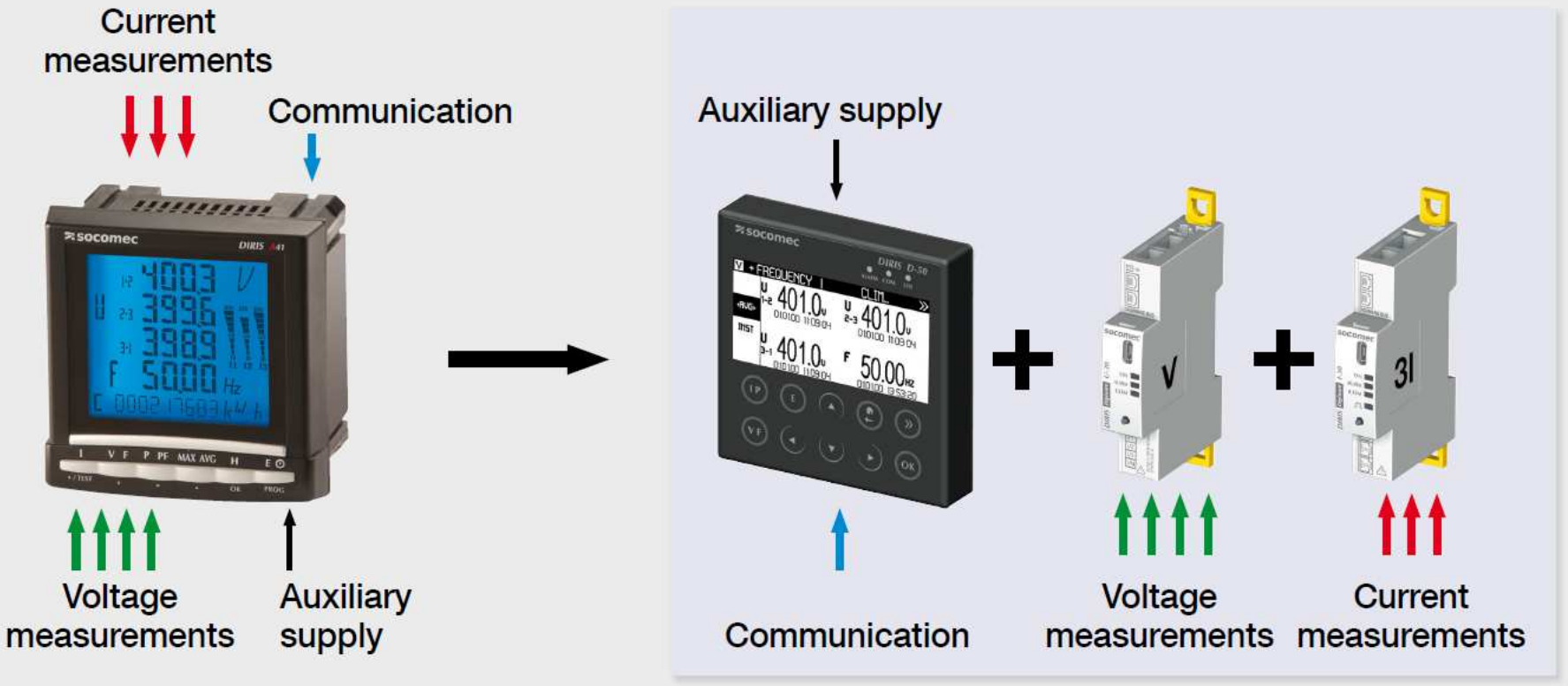

DIRIS Digiware Concept

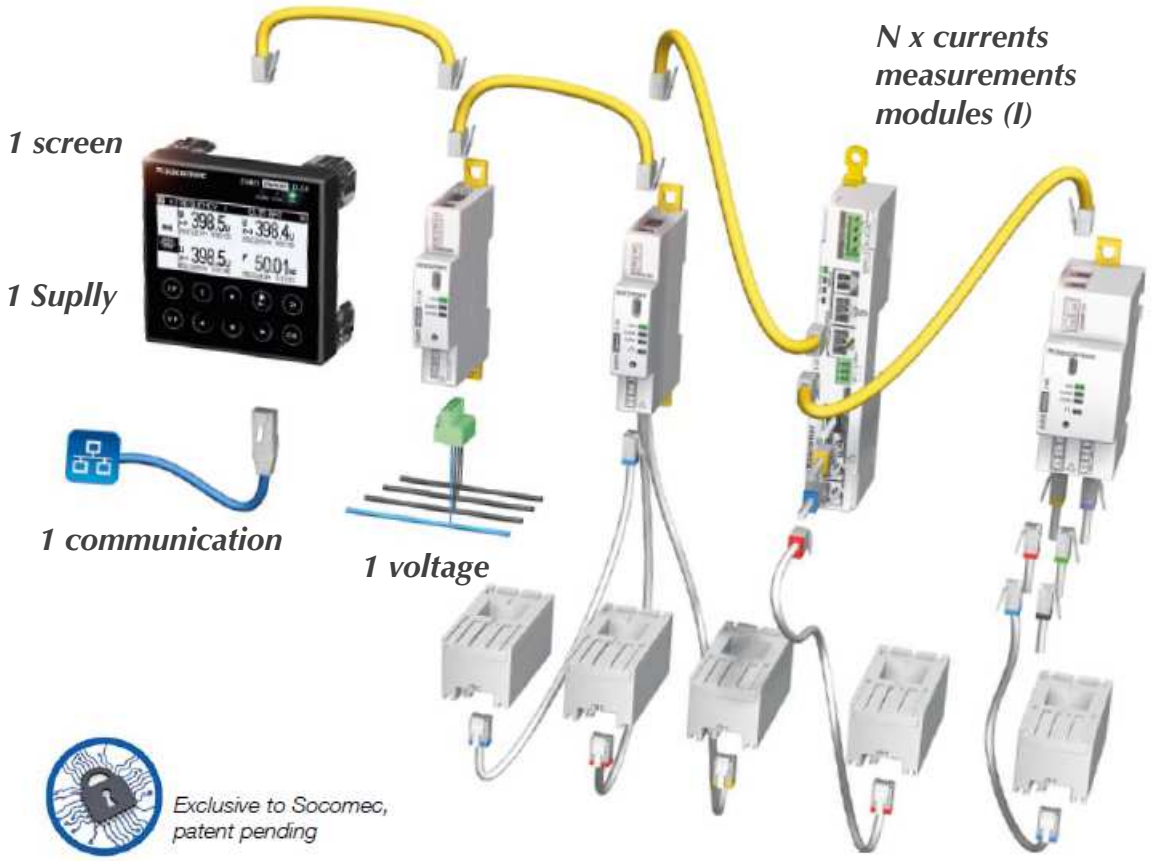

Global offer from 5 A to 6000A

Distribution panel



Switch board panel



DIRIS Digiware Range

Control and power supply interface (24 VDC)



DIRIS Digiware D
with display



DIRIS Digiware C
without display

+

Voltage measurement module



DIRIS Digiware U-x

+

Current measurement modules



DIRIS Digiware I-3x
3 current sensor inputs



DIRIS Digiware I-4x
4 current sensor inputs



DIRIS Digiware I-6x
6 current sensor inputs

Muti-feeders System With display	Muti-feeders System Without display	*U-10*: Metering *U-20*: Monitoring *U-30*: Analysise	*I-30*: Metering *I-31*: Meteing & Load curves *I-33*: Monitoring *I-35*: Analysis *I-45*: Analysis IN/OUT *I-60*: Meterin *I-61*: Meteing & Load curves

Multi feeders products

Multidépart : Exemples réseaux et charges associées

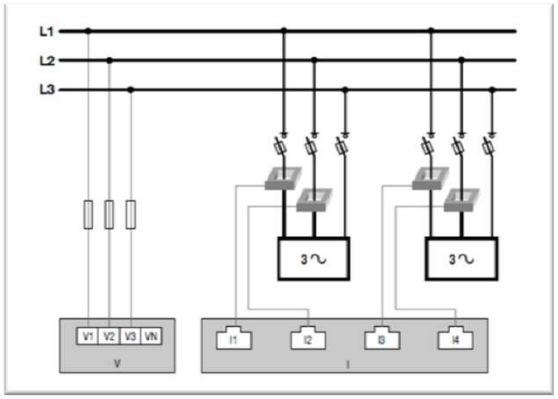

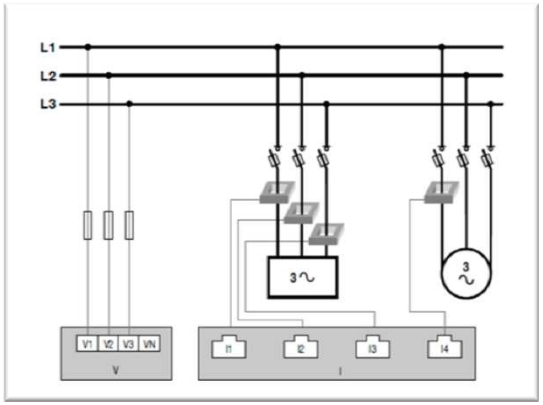

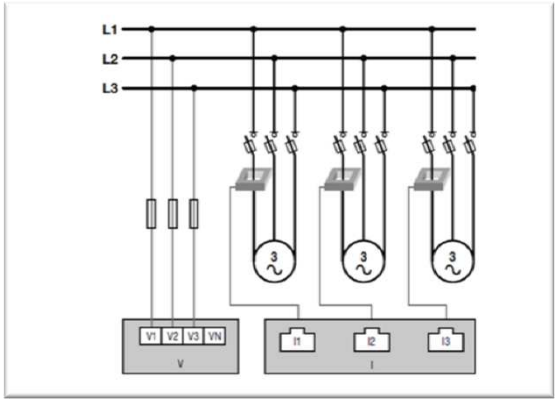

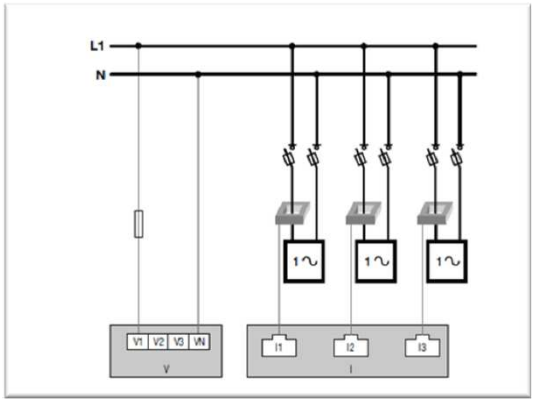

TE sensors - RJ12 connection

TE

From 20 A tà 1000 A

CT/5A adaptor

Global class (PMD + sensors):
Class 0,5 from 2 to 120 %
CEI 61557-12

Auto detection of sensors ratio

Checking the direction of the current

Fully adapted to circuit brakers pitchs





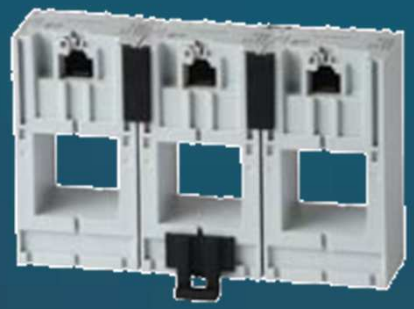

TR & TF sensors - RJ12 connection

TR
retrofit

from 75 A to 600 A

Global class (PMD + sensors):
Class 1 from 2 to 120 %
CEI 61557-12

Auto detection of sensors ratio

Checking the direction of the current



TF
flexible

from 600 A to 6000 A

Global class (PMD + sensors):
Class 0,5 from 2 to 120 %
CEI 61557-12

Auto detection of sensors ratio

Checking the direction of the current



Diris Digiware

Classified as PMD DD

PMD + CT

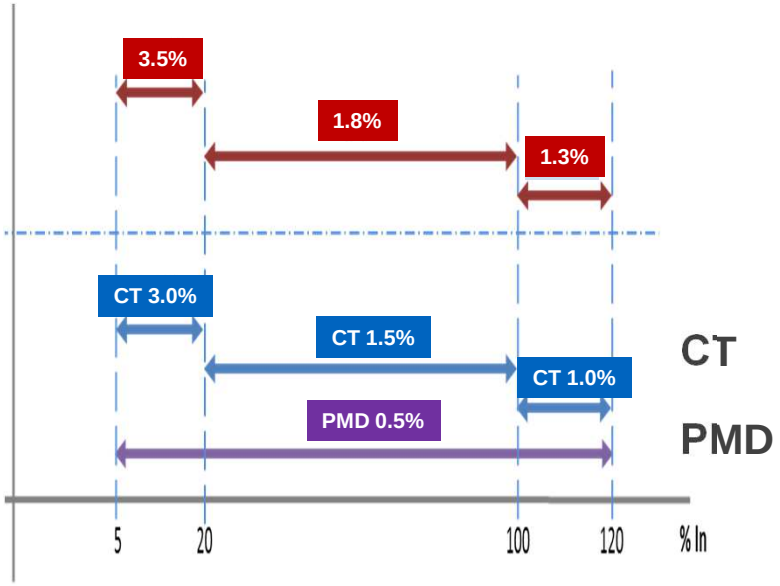

Diris Digiware

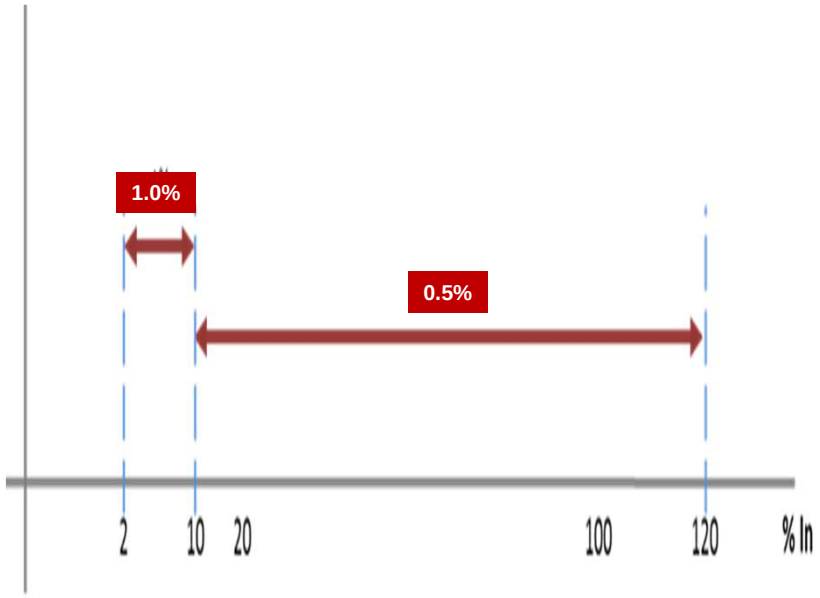

DIRIS Digiware surpasses PMD + external CT on accuracy performance by > 3.5 times !

Diris Digiware

Expanded CT Range

TE sensor – closed sensor

	TE-18	TE-18	TE-25	TE-35	TE-45	TE-55
Range of rated current In	5A to 20A	25 to 63A	40 to 160A	63 to 250A	160 to 630A	400 to 1000A

TR sensor – open sensor

	TR-10	TR-16	TR-24	TR-36
Range of rated current In	25 to 75A	32 to 100A	63 to 200A	200 to 600A

TF sensor – flexible sensor

	TF-55	TF-120	TF-300
Range of rated current In	150 to 600A	500 to 2000A	1600 to 6000A

- Measure with high accuracy from as low as 100mA !
- Reduce significantly the number of CT references (5 to 1)

DIRIS Digiware measures with high accuracy from as low as 100mA !

Diris Digiware

Reduce Energy Cost

Tri-phase network (3*230/400V)

PF= 1

	Nominal current (A)	Load (% In)	Active energy cumulated on 1 year (kWh)	
PMD Cl 0,5 + CT	1000	35	2 115 540	DIRIS Digiware
	600	35	1 269 324	
	250	35	528 885	
	250	35	528 885	

CT Class	Overall accuracy at In	Error annual consumption (kWh)	Δ energetic cost	Overall accuracy	Error annual consumption (kWh)	Δ energetic cost
0,5	1,04	21 930	877 €	0,50	10 578	423 €
0,5	1,04	13 158	526 €	0,50	6 347	254 €
0,5	1,04	5 482	219 €	0,50	2 644	106 €
1	1,82	9 617	385 €	0,50	2 644	106 €

DIRIS Digiware reduces energy cost by **> 2X** due to better accuracy

How Digiware Optimises Energy Performance

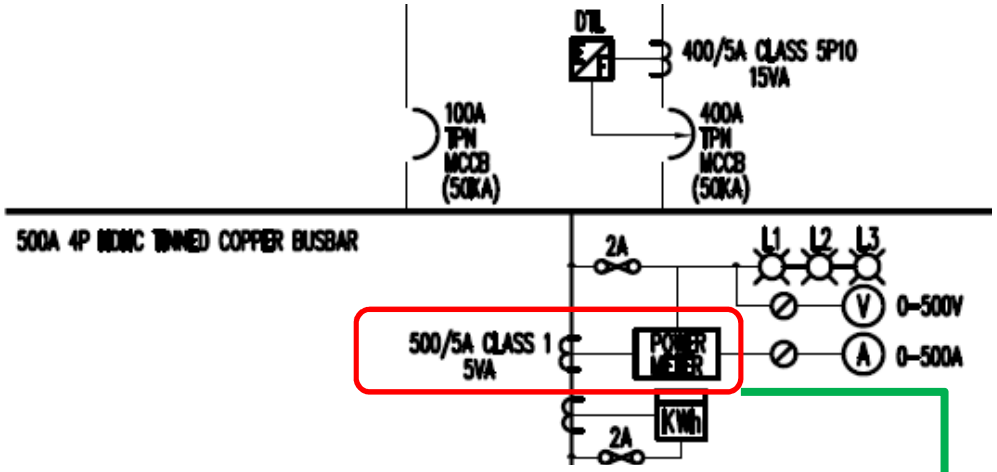

IEC [redacted]9-2

IEC 61557-12

Digiware Solution – With Display

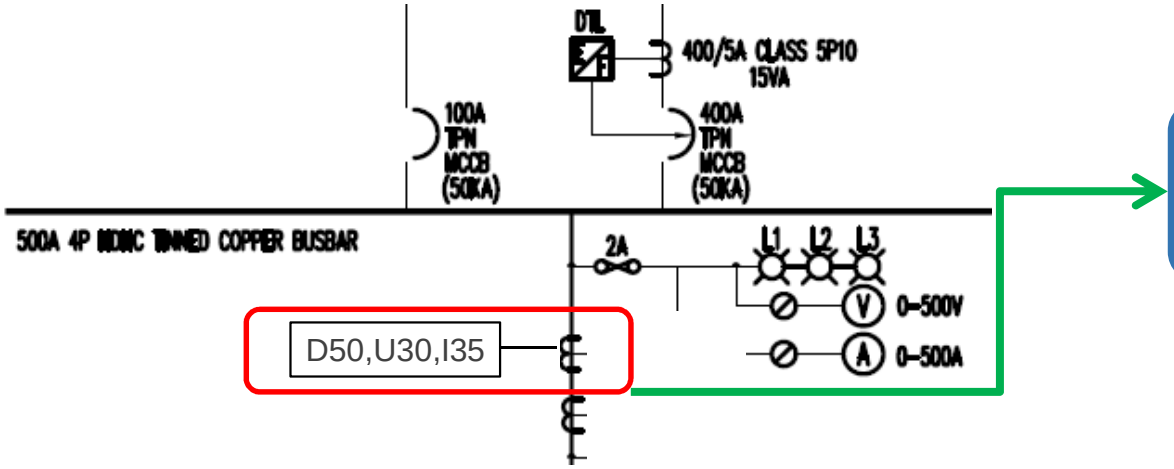

IEC 61557-12

- Global Accuracy Class 0.5
- (2 to 120%)
- Plug and Play
- Multi circuits measurements
- Quick installation
- Quick retrofit
- Free Webview (4GB of storage, load curves, consumption, trending, emails)



Part 5 : Conclusion

Conclusion

1. Understand the IEC standards for current sensors and PMD
2. Understand the importance of overall system accuracy
3. Diris Digiware guarantee energy performance Class 0.5 from 2 to 120% In



Digiware retrofit

socomec
Innovative Power Solutions