AHU Control Example

- with CO_2 sensor

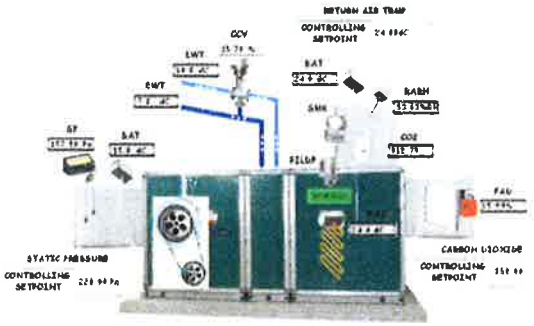

Copyright © Carrier Corp. 2015

Carrier
Turn to the Experts

Water-cooled chilled-water system

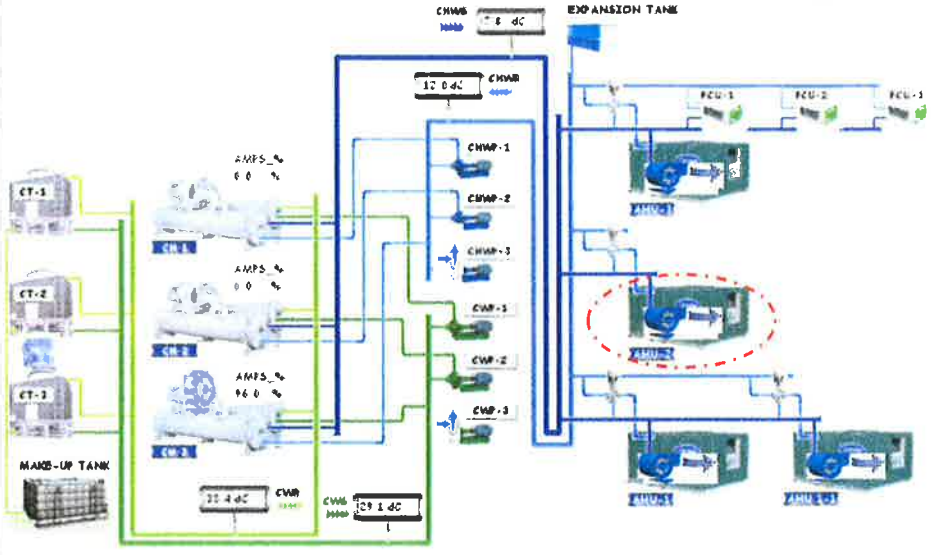

Copyright © Carrier Corp. 2015

Carrier
Turn to the Experts

AHU control build-up

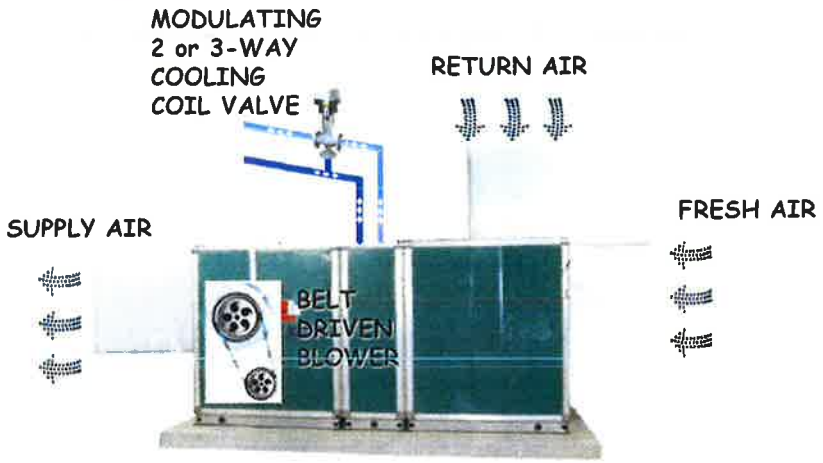

Copyright © Carrier Corp. 2015

AHU control build-up



Duct Temperature Sensor

Return Air Temperature

Supply Air Temperature



Copyright © Carrier Corp. 2015

Air temperature sensor

Mounting
Drill a 5.8" (1.6 cm) hole for probe insertion and serpentine the sensor across the duct, turning at each end using the Model M-648 end clip and Model M-633 mid-duct support. Avoid kinking the tube as this could cause a short circuit. Using the provided #6 screws, secure the box to the duct either with the mounting ears or through the box holes.



CC-IG
Capillary Support

Wiring
Terminate with butt splices or soldering. Wire nuts are not recommended. Use the full 8" (2.4m) lead length provided to avoid moisture migration from the field connections.

Averaging Temperature Sensor



Copyright © Carrier Corp. 2015

Carrier
Turn to the Experts

AHU control build-up



Mixed Air Temperature

Copyright © Carrier Corp. 2015

Carrier
Turn to the Experts

Water temperature sensor

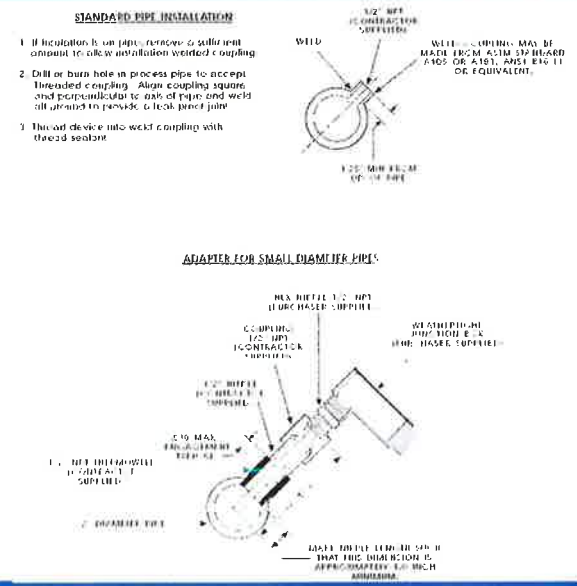

Water Immersion Temperature Sensor with Thermal Well



Copyright © Carrier Corp. 2015

Carrier turn to the experts

AHU control build-up



Thermal well

Water Immersion Sensor





Copyright © Carrier Corp. 2015

Carrier turn to the experts

AHU control build-up



Duct Humidity Sensor

Return Air Relative Humidity



Copyright © Carrier Corp. 2015

Carrier turn to the experts

AHU control build-up

Ducted Smoke Detector



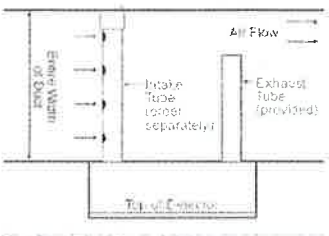

Mount the detector in an air duct using the provided template and four sheet metal screws. Detector must be mounted at least six duct widths from the fan or other sources of turbulence with airflow from 600-4000 fpm (3.0-20.3 mps). The intake sampling tube has holes drilled the entire length of the tube and should extend the entire width of the duct. The holes must be facing into the airflow (see Figure 1 to the right). The exhaust tube is a piece of steel tubing approximately 7" long (17.8 cm).

Intake Sampling Tube Lengths

Model	Duct Width
STS-2.5	5.0" to 2.5' (0.15 to 0.7m)
STS-5.0	2.5' to 5.0' (0.7 to 1.5m)
STS-10.0	5.0' to 10.0' (1.5 to 3m)

Installation

1. Cut the intake sampling tube to the desired length.
2. Firmly insert the stopper (provided with the detector) in the end of the intake sampling tube.
3. Follow instruction sheet provided with each detector.

Copyright © Carrier Corp. 2015

Carrier turn to the experts

- purpose to shut off AHU to prevent smoke from being transferred from 1 room to another.

AHU control build-up

Ducted Smoke Detector





Copyright © Carrier Corp. 2015

turn to the experts

AHU control build-up

Carbon Dioxide Sensor

Modulating Damper



Respirator Box





Copyright © Carrier Corp. 2015

turn to the experts

AHU control build-up



Starter



Variable Speed Drive



Copyright © Carrier Corp. 2015

Carrier
Turn to the Experts

AHU control build-up

Stage Heater



Reheat

Starter



Variable Speed Drive



Copyright © Carrier Corp. 2015

Carrier
Turn to the Experts

AHU control build-up

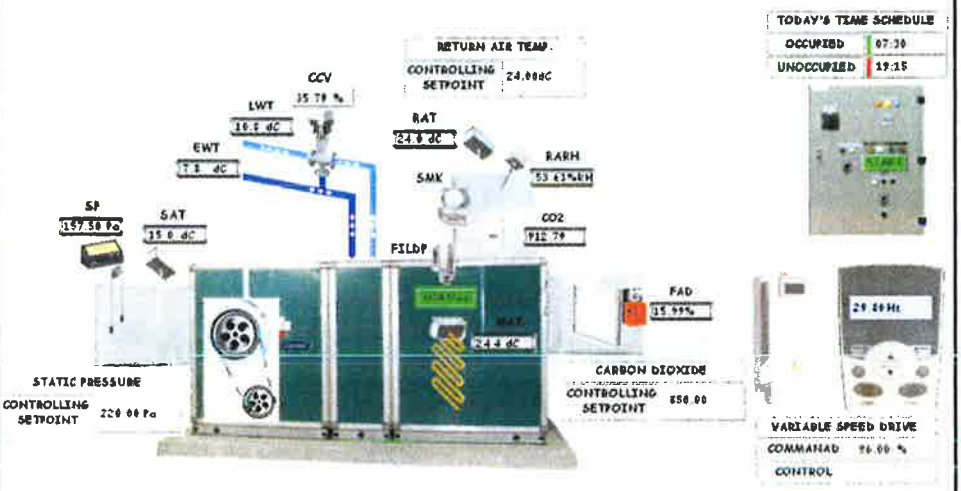

Copyright © Carrier Corp. 2015

turn to the experts

AHU operating parameter

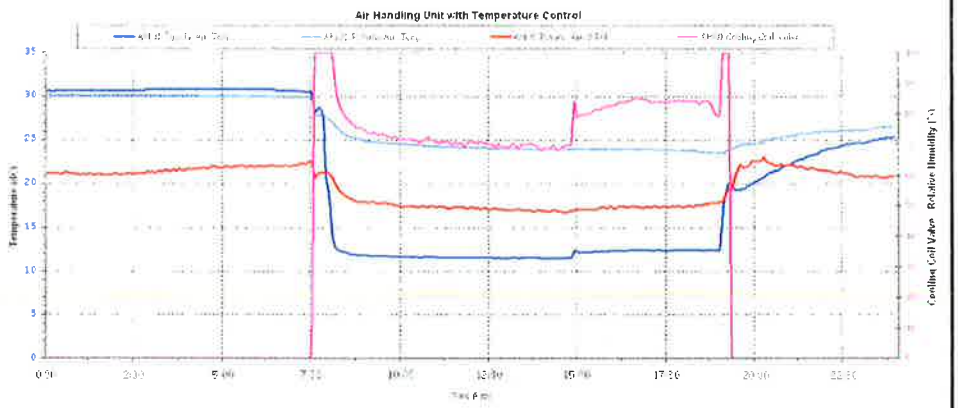

Copyright © Carrier Corp. 2015

turn to the experts

Chiller plant operating parameter

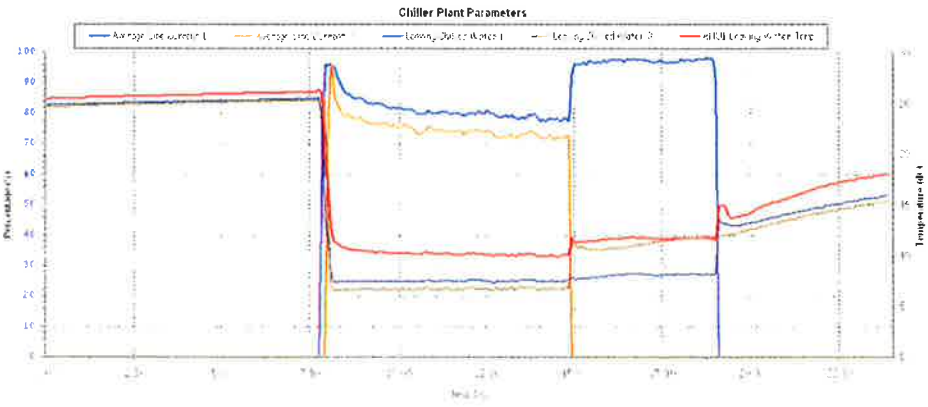

Copyright © Carrier Corp. 2015

Carrier
Turn to the Experts

AHU operating parameter

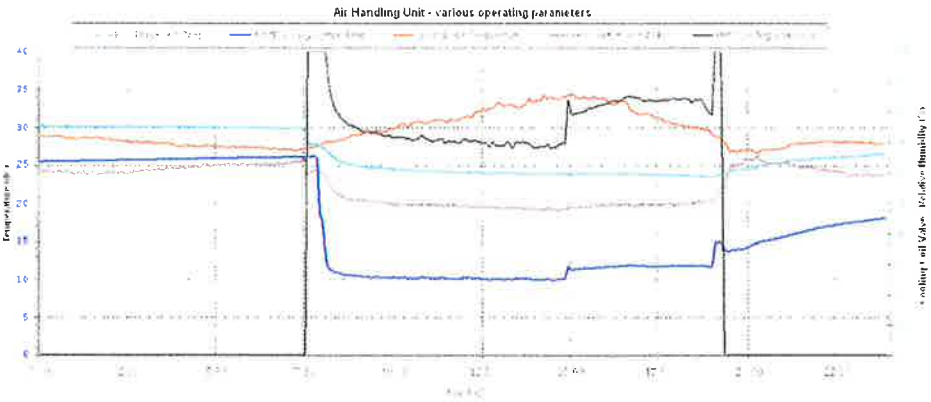

Copyright © Carrier Corp. 2015

Carrier
Turn to the Experts