High permeability toroid and ferrite core to reduce common mode noise

Datasheet 3/2017

APPROVALS:

CE



FINTR.(3600 - 14000)
FINFE.13

FEATURES

- Insulation plastic housing included
- FINTR with high permeability

BENEFITS

- Fast installation
- Helps pass radiated emission test per EN61000-6-4

MARKETS

- Indoor and outdoor applications

ORDERING CODE

FINTR .4900 .
Model
TR = Toroid Size
FE = Ferrite

FINTR	Permeability μ
.3600	5000
.4900	10000
.6300	10000
.10000	5500
.14000	5500

MECHANICAL DIMENSIONS mm

FINTR	A	B	C	Weight Kg.	Case
.3600	37	22	16	0.04	1
.4900	49	34	16	0.08	1
.6300	63	38	25	0.25	1
.10000	102	66	15	0.36	1
.14000	140	106	25	0.80	1

FINFE	A	B	C	D	Weight Kg.	Case
.13	31	32	13	33	0.1	2

CASE 1

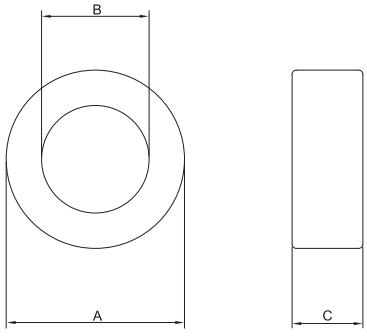

CASE 2

